ROTH FARROWING FACILITY

WAUZEKA, WI

PROJECT NO. 1916215

DRAWING INDEX

SHEET	TITLE
S0.1	COVER SHEET
S1.0	OVERALL PLAN VIEW
S1.1	GDU BARN FOUNDATION PLAN
S1.2	GDU WALL EXPANSION JOINT PLANS
S1.3	GESTATION BARN FOUNDATION PLAN - WEST
S1.4	GESTATION BARN FOUNDATION PLAN - EAST
S1.5	GESTATION BARN WALL EXPANSION JOINT PLAN - WEST
S1.6	GESTATION BARN WALL EXPANSION JOINT PLAN - EAST
S1.7	FARROWING BARN FOUNDATION PLAN
S1.8	FARROWING BARN WALL EXPANSION JOINT PLAN
S1.9	COMPOSTING BUILDING & DETAILS
S1.10	CONNECTOR BUILDING
S5.1	GDU BARN DETAILS
S5.2	GDU BARN DETAILS
S5.3	GDU/GESTATION BARN DETAILS
S5.4	GESTATION BARN DETAILS
S5.5	GESTATION BARNDETAILS
S5.6	FARROWING BARN DETAILS
S5.7	FARROWING BARN DETAILS
S5.8	COMPOST DETAILS
S5.9	CONNECTOR BLDG DETAILS
S5.10	CONNECTOR BLDG DETAILS
S6.1	FOUNDATION DETAILS

SITE MAP

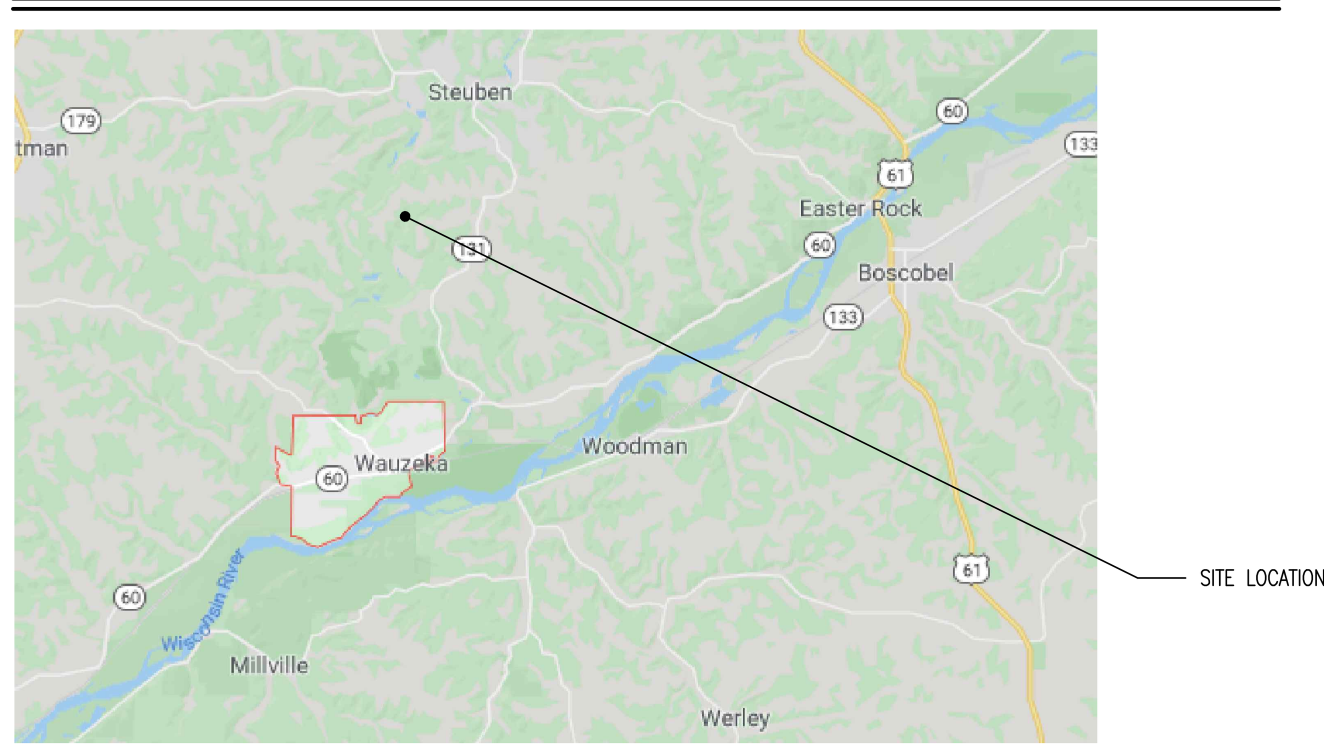

STRUCTURAL NOTES

GENERAL:

1. THIS LIQUID MANURE WASTE STORAGE TANK HAS BEEN DESIGNED TO MEET THE REQUIREMENTS OF NRCS 313 (10/17), ACI 318, ACI 350 & ASCE 7 -10.
2. DESIGN LOADS
   a. EXTERNAL LATERAL SOIL PRESSURE AT RETAINING WALLS = 100 PSF/FT OF DEPTH (NRCS TABLE 4: CL, ML, CL-ML UNIFIED SOIL CLASSIFICATION)
   b. WALLS HAVE BEEN DESIGNED WITH AN ADDITIONAL 2'-0" OF SOIL SURCHARGE TO ACCOUNT FOR HEAVY EQUIPMENT OPERATING NEAR THE WALLS OF THE VESSEL
   c. WASTE PROTECTED FROM PRECIPITATION = 60 PSF/FT OF DEPTH
   d. SOLID WASTE MANURE = 45 PSF/FT OF DEPTH
   e. PRECAST SLAT/BEAM DEAD LOAD = 34 PSF
      SOLID SLATS = 50 PSF
   f. SOW PIG LIVE LOAD = 70 PSF
   g. ASSUMED BUILDING LOADS:
      i. BUILDING DEAD LOAD = 20 PSF
      ii. ROOF SNOW LOAD = 25.2 PSF
      iii. METAL ROOF ON COMPOST BUILDING = 5.0 PSF
      iv. SERVICE WIND LOAD = 20 PSF (PRESSURE/SUCTION APPLIED TO ONE WALL)
      v. THE BUILDING SHELL FOR THE GDU BARN IS ASSUMED TO ONLY BEAR ON THE EXTERIOR WALLS WITH NO INTERIOR BEARING POINTS. FOR THE GESTATION BARN; ONE INTERIOR BEARING POINT IS ASSUMED. FOR THE FARROWING BARN; TWO INTERIOR BEARING POINTS ARE ASSUMED. CONTACT TANK STRUCTURAL ENGINEER IF THIS ASSUMPTION IS INCORRECT. CONNECTOR BUILDING; EXTERIOR WALLS ARE LOAD BEARING.
   h. SLAB IS DESIGNED PER ACI-350; WALLS ARE DESIGNED PER ACI-318
3. LOADING CONDITIONS
   a. WALLS DESIGNED WITH BACKFILL FULL HEIGHT AND TANK EMPTY.
4. THE STRUCTURE IS DESIGNED TO FUNCTION AS A UNIT UPON COMPLETION. THE CONTRACTOR IS RESPONSIBLE FOR DESIGNING AND FURNISHING ALL TEMPORARY BRACING, FORM WORK AND/OR OTHER SUPPORT THAT MAY BE REQUIRED AS THE RESULT OF THE CONTRACTOR'S CONSTRUCTION METHODS AND/OR SEQUENCES. THE STRUCTURAL ENGINEER ASSUMES NO LIABILITY FOR THE STRUCTURE DURING CONSTRUCTION.
5. THE CONTRACTOR IS RESPONSIBLE FOR ALL MEANS AND METHODS OF CONSTRUCTION AND ALL JOB SITE SAFETY.
6. THE CONTRACTOR SHALL FIELD VERIFY ALL DIMENSIONS AND EXISTING CONDITIONS PRIOR TO CONSTRUCTION. NOTIFY THE ENGINEER AND ARCHITECT OF ANY DISCREPANCY IMMEDIATELY.
7. THE CONTRACTOR IS RESPONSIBLE FOR COORDINATION OF ALL BUILDING MATERIALS AND COMPONENTS. INDEPENDENTLY PREPARED SHOP DRAWINGS ARE REQUIRED OF ALL TRADES FOR COORDINATION AND BEST PRACTICE. ERRORS OR OMISSIONS IN INSTALLATION DUE TO THE CONTRACTOR'S FAILURE TO COORDINATE THE WORK WILL BE THE SOLE RESPONSIBILITY OF THE CONTRACTOR.
8. THE CONTRACTOR SHALL NOTIFY MP-SQUARED WHEN ALL REINFORCING IS TIED IN PLACE AND MINIMUM OF 24HOURS PRIOR TO PLACING CONCRETE.

FOUNDATION:

1. PROJECT GEOTECHNICAL REPORT SUPERSEDES GEOTECHNICAL INFORMATION PROVIDED ON STRUCTURAL PLANS.
2. PRESUMPTIVE SOIL BEARING CAPACITY = 1,500 PSF. THE STRUCTURAL ENGINEER MAKES NO WARRANTY AND ASSUMES NO LIABILITY REGARDING ACTUAL SOIL CONDITIONS. THE GENERAL CONTRACTOR SHALL RETAIN A SOILS TESTING FIRM TO VERIFY SOILS MEET OR EXCEED THE PRESUMED CAPACITY. SOILS TESTING FIRM TO PROVIDE RECOMMENDATIONS TO IMPROVE SOIL CONDITIONS WHEN APPLICABLE AND TO PROVIDE RECOMMENDATIONS REGARDING UNDERCUTTING, FILL, SUB-BASE, EXCAVATION AND SITE MONITORING. CONTACT MP2 IF FOUNDATION MODIFICATIONS ARE REQUIRED DUE TO POOR SOILS.
3. ALL FOOTINGS SHALL BEAR ON COMPACTED SOIL HAVING A MINIMUM ALLOWABLE BEARING CAPACITY EQUAL TO THE PRESUMPTIVE CAPACITY ABOVE.
4. THE ENGINEER SHALL BE NOTIFIED IF ACTUAL FIELD CONDITIONS DO NOT MEET BEARING REQUIREMENTS, OR IF QUESTIONABLE SOIL CONDITIONS ARE DISCOVERED INCLUDING BUT NOT LIMITED TO PEAT AND OTHER HIGH ORGANIC SOILS OR EXPANSIVE CLAY.
5. SLAB ON GROUND TO BE CONSTRUCTED ON COMPACTED SUBGRADE TO 95% MODIFIED PROCTOR OR AS DIRECTED BY THE GEOTECHNICAL ENGINEER.
6. ALL BEARING SOIL OR FILL MUST BE PROTECTED FROM FREEZING. THE CONTRACTOR SHALL PROVIDE PROTECTION TO PREVENT FROST PENETRATION BELOW THE CONCRETE BEARING ELEVATIONS. ANY FROZEN SOIL BELOW THE FOUNDATION BEARING LEVEL MUST BE REMOVED PRIOR TO PLACING CONCRETE.
7. ALL SLABS ON GRADE AREAS SHALL BE PROOF ROLLED. ALL SOFT SPOTS SHALL BE REMOVED AND REPLACED WITH NON-FROZEN MATERIAL OF SAME CLASSIFICATION AS APPROVED SOIL. CONTACT SITE ENGINEER PRIOR TO PLACEMENT OF MATERIAL.
8. WHEN IT IS POSSIBLE FOR GROUND WATER TO SEEP TOWARD SUBGRADE FOUNDATIONS AND RETAINING WALLS, THESE WALLS SHALL HAVE A POSITIVE DRAINAGE SYSTEM AT THE BASE OF THE WALL CONSISTING OF A PERFORATED DRAIN PIPE PROTECTED BY A GEOTEXTILE FABRIC SURROUNDED BY CONCRETE SAND (TORPEDO SAND). NEAR THE BASE OF THE WALL. OTHER BACK FILL MATERIAL SHALL BE SAND WITH LESS THAN 12% PASSING THE #200 SIEVE.
9. DO NOT USE EXCESSIVE COMPACTION EFFORTS ADJACENT TO RETAINING WALLS. SUCCESSIVE PASSES OF A COMPACTOR CAN RESULT IN WALL PRESSURE BUILD UP BEYOND THE DESIGN INTENT.
10. REFER TO THE GEOTECHNICAL INVESTIGATION FOR INFORMATION REGARDING EXCAVATION, SIDE SLOPES, SUB-GRADE PREPARATION, AND FILL RECOMMENDATIONS.
11. REMOVE TOPSOIL FROM BENEATH ALL PROPOSED CONSTRUCTION AREAS. SALVAGE AND STOCK PILE TOPSOIL, CUT/FILL MATERIAL AS NECESSARY TO MATCH GRADES SHOWN ON SITE PLAN DRAWINGS.
12. ALL FILL MATERIAL USED IN GRADING OPERATIONS SHALL CONSIST OF EARTH, WHICH IS FREE OF DEBRIS, BOULDERS OR ORGANIC MATERIAL. FILL SHALL BE PLACED IN MAXIMUM OF 12" LIFTS AND COMPACTED TO 95% OF MODIFIED PROCTOR MAXIMUM DRY DENSITY OR AS DIRECTED BY THE GEOTECHNICAL ENGINEER.

CONCRETE CONSTRUCTION:

1. THE CONTRACTOR SHALL REVIEW AND FOLLOW ALL REQUIREMENTS OF WISCONSIN CONSTRUCTION SPECIFICATION 4 - CONCRETE AND NOTES BELOW. ANY DEVIATION FROM THIS SPECIFICATION OR NOTES SHALL BE BROUGHT TO THE ATTENTION OF THE ENGINEER FOR REVIEW AND APPROVAL.
2. ALL CONCRETE DESIGN AND CONSTRUCTION SHALL CONFORM TO THE LOCAL BUILDING CODE REQUIREMENTS AND THOSE OF THE LATEST EDITION OF THE FOLLOWING STANDARDS:
   a. USDA-NRCS-WISCONSIN SECTION IV TECHNICAL GUIDE 5/13.
   b. NRCS 313 (10/17).
   c. ACI 318, ACI 360, ACI 315, ACI 301, ACI 350 AND ACI 307.
3. ALL CONCRETE SHALL BE NORMAL WEIGHT (145 PCF). ALL CONCRETE, CONCRETE PLACEMENT AND CURING SHALL CONFORM TO SPECIFICATIONS OF USDA-NRCS-WISCONSIN SECTION IV UNLESS SPECIFICALLY NOTED OTHERWISE. CONCRETE SHALL ACHIEVE A MINIMUM 28 DAY COMPRESSIVE STRENGTH (f'c) AS FOLLOWS:
   a. SLAB ON GROUND f'c = 4,500 PSI
   b. FOOTINGS f'c = 4,000 PSI
   c. CONTAINMENT TANK WALLS f'c = 4,000 PSI
4. THE READY MIX CONCRETE SUPPLIER SHALL PROVIDE A MIX DESIGN THAT MINIMIZES SHRINKAGE. THIS MIX DESIGN SHALL MINIMIZE THE AMOUNT OF WATER TO 0.4 - 0.45 W/C RATIO, MINIMIZE CONCRETE PASTE, AND USE AGGREGATES OF APPROPRIATE TYPE, SIZE AND GRADATION PER ACI 360.
5. WHEN APPLICABLE, GROUT USED TO SEAL AROUND PIPE PENETRATION SHALL BE NON-SHRINK, NON-METALLIC GROUT WITH A COMPRESSIVE STRENGTH EQUAL TO OR GREATER THAN THE COMPRESSIVE STRENGTH OF THE SURROUNDING CONCRETE MEMBER.
6. ALL CONCRETE SUBJECT TO EXTERIOR EXPOSURE SHALL BE AIR ENTRAINED BETWEEN 4% AND 8%. ALL CONCRETE WITHOUT SUPERPLASTICIZERS SHALL HAVE A MAXIMUM SLUMP OF 4".
7. UNLESS THE MIX DESIGN INCLUDES THE USE OF SUPERPLASTICIZERS, CONCRETE WITH A SLUMP GREATER THAN 5" SHALL BE REFUSED. CONCRETE WITH APPROVED SUPERPLASTICIZERS SHALL NOT HAVE A SLUMP OF GREATER THAN 8".
8. CALCIUM CHLORIDE AND OR ADMIXTURES CONTAINING CALCIUM CHLORIDE SHALL NOT BE USED.
9. ALL CONCRETE REINFORCING STEEL TO BE ASTM A615 GRADE 60. ALL REINFORCING SHALL BE DETAILED AND PLACED IN ACCORDANCE WITH ACI 315 AND 315R.
10. ALL REINFORCING BARS SHALL BE SET ON CHAIRS AND TIED IN PLACE.
11. THE SUBGRADE SHOULD BE DAMPENED JUST PRIOR TO PLACING SLAB-ON-GROUND CONCRETE UNLESS PLASTIC SHEETING/ VAPOR BARRIER IS USED.
12. AFTER CONCRETING HAS STARTED, IT SHALL BE CARRIED ON AS A CONTINUOUS OPERATION UNTIL PLACING OF A PANEL OR SECTION, AS DEFINED BY ITS BOUNDARIES OR PREDETERMINED JOINTS, IS COMPLETED. CONCRETE SHALL BE DEPOSITED AS NEARLY AS PRACTICABLE TO ITS FINAL POSITION TO AVOID SEGREGATION DUE TO REHANDLING OR FLOWING.
13. CONCRETING OPERATIONS SHALL BE CARRIED ON AT SUCH A RATE THAT THE CONCRETE IS AT ALL TIMES PLASTIC AND FLOWS READILY INTO SPACES BETWEEN REINFORCEMENT.
14. CONCRETE SHALL BE THOROUGHLY CONSOLIDATED BY SUITABLE MEANS DURING PLACEMENT AND SHALL BE THOROUGHLY WORKED AROUND REINFORCEMENT AND EMBEDDED FIXTURES AND INTO CORNERS OF THE FORMS. THE TOP SURFACES OF VERTICALLY FORMED LIFTS SHALL BE GENERALLY LEVEL.
15. IF CONCRETE EDGE BECOMES NON-PLASTIC AND WILL NOT READILY MERGE WITH SUCCESSIVE CONCRETE PLACEMENTS A CONSTRICTION JOINT MUST BE INSTALLED. RETEMPERED CONCRETE, CONCRETE THAT HAS BEEN REMIXED AFTER INITIAL SET OR PARTIALLY HARDENED SHALL NOT BE USED IN THE STRUCTURE.
16. CONCRETE SHALL BE CURED ABOVE 50°F (10°C) AND IN A MOIST CONDITION FOR AT LEAST THE FIRST SEVEN DAYS AFTER PLACEMENT.
17. ALL FLAT WORK CONCRETE SHALL BE COVERED IMMEDIATELY FOLLOWING SAW CUTTING AND MAINTAINED CONTINUOUSLY WET FOR A MINIMUM OF 7-DAYS AFTER PLACING (PONDING METHOD). CURING SHEETS ARE TO BE USED AND REMAIN IN PLACE.
18. SLAB REINFORCING BARS SHALL BE PLACED WITHIN 1-1/2" OF THE TOP OF THE SLAB UNLESS NOTED OTHERWISE. PLACING REINFORCING ON CHAIRS OR BOLSTERS AT 3' TO 4' ON CENTER IS REQUIRED. LIFTING REINFORCING AFTER CONCRETE IS PLACED IS NOT CONSIDERED TO BE AN EFFECTIVE MEANS OF PLACEMENT AND SHALL NOT BE ALLOWED.
19. ALL LAPS SHALL BE "B" SPLICES UNLESS NOTED OTHERWISE ON THE DRAWINGS OR UNLESS SPECIAL CARE IS TAKEN FOR THE REINFORCING TO BE DETAILED AND PLACED TO PROVIDE STAGGERED LAPS.
20. ALL CONCRETE SHALL BE CURED FOR A MINIMUM OF SEVEN DAYS.
21. UNLESS OTHERWISE APPROVED, ALL EXPOSED CONCRETE WALLS SHALL BE CURED WITH FORMS LEFT IN PLACE FOR SEVEN DAYS. IF FORMS CAN NOT BE LEFT IN PLACE THE CONTRACTOR SHALL SUBMIT IN WRITING TO THE ENGINEER ALL PROPOSED CURING METHODS.
22. SOME FINE LINE RANDOM SHRINKAGE CRACKING MAY DEVELOP HOWEVER PER NRCS 313-10, ACI 360 & PCA 2008 WITH THE USE OF STEEL AS SHOWN THESE CRACKS ARE EXPECTED TO PERFORM AT A WATERTIGHT LEVEL. LARGER WALL AND FLOOR CRACKS DUE TO IMPROPER CURING METHODS, WEATHER PROTECTION, SUBSTITUTION, DELETION OR MISPLACEMENT OF REINFORCEMENT OR IMPROPER MIX DESIGN SHALL BE THE RESPONSIBILITY OF THE CONTRACTOR.
24. PLACING OF CONCRETE SHALL BE DONE IN CONFORMANCE WITH ACI-306 FOR COLD WEATHER AND ACI-305 FOR HOT WEATHER.

MISCELLANEOUS:

1. ALL DRAWINGS ARE OF EQUAL IMPORTANCE IN DEFINING THE WORK OF THE CONTRACT DOCUMENTS. CONTRACTOR SHALL CAREFULLY REVIEW AND COMPARE ALL DRAWINGS DURING THE BIDDING PERIOD AND BEFORE INSTALLATION OF THEIR WORK. ANY INCONSISTENCIES IN THE DRAWINGS SHALL BE REPORTED PROMPTLY TO THE ENGINEER FOR CLARIFICATION.
2. EVERY EFFORT HAS BEEN MADE TO PROVIDE TO SCALE DRAWINGS (WHEN PLOTTED AT 11X17); HOWEVER, THE DRAWINGS ARE NOT NECESSARILY TO SCALE - USE GIVEN DIMENSIONS.

CONCRETE-CONT:

25. UNLESS NOTED OTHERWISE ON THE DRAWINGS ALL REINFORCING SHALL BE LAPPED TO DEVELOP ITS CAPACITY AS FOLLOWS:

UNCOATED STANDARD & CLASS "B" TENSION LAP LENGTHS[1,5]

CONCRETE COMPRESSIVE STRENGTH f'_c=3,000 PSI					CONCRETE COMPRESSIVE STRENGTH f'_c=4,000 PSI				
	STD DEVLOPMENT LENGTH[2]		CLASS "B" TENSION LAP LENGTH[3]			STD DEVLOPMENT LENGTH[2]		CLASS "B" TENSION LAP LENGTH[3]	
BAR SIZE	BTM BARS	TOP BARS[4]	BTM BARS	TOP BARS[4]	BAR SIZE	BTM BARS	TOP BARS[4]	BTM BARS	TOP BARS[4]
#3	17"	22"	22"	28"	#3	15"	19"	19"	25"
#4	22"	29"	29"	38"	#4	19"	25"	25"	33"
#5	28"	36"	36"	47"	#5	24"	31"	31"	41"
#6	33"	43"	43"	56"	#6	29"	37"	37"	49"
#7	48"	63"	63"	81"	#7	42"	54"	54"	71"
#8	55"	72"	72"	93"	#8	48"	62"	62"	81"

1. BASED ON ℓ_d VALUES FROM SECTION 25.4.2.2 IN ACI318-14:
   1.1. GRADE 60 REINFORCEMENT BARS
   1.2. NORMAL WEIGHT CONCRETE (λ=1.0)
   1.3. NON-EPOXY COATED BARS (Ψ_e=1.0)
   1.4. CLEAR COVER > 1.0d_b ; CLEAR SPACING > 2.0d_b; NOTIFY ENGINEER IF COVER NOT MET.
2. STANDARD LAP SPLICES ARE TO BE USED WHEN <50% OF BARS ARE LAPPED AT THE SAME LOCATION, INCLUDING TEMPERATURE AND SHRINKAGE LAP SPLICES.
   2.1. PROVIDE CLASS B LAP SPLICES UNLESS DETAILED AND APPROVED BY ENGINEER.
3. CLASS B LAP SPLICES ARE TO BE USED WHEN >50% OF BARS ARE LAPPED AT THE SAME LOCATION, INCLUDING TEMPERATURE AND SHRINKAGE LAP SPLICES.
4. HORIZONTAL (TOP) BARS HAVE MORE THAN 12" OF FRESH CONCRETE PLACED BELOW REINFORCEMENT. (Ψ_t=1.3); VERTICAL BARS (Ψ_t=1.0).
5. SPLICE LENGTHS ARE ROUNDED UP TO THE NEAREST INCH.

WATERSTOP:

1. EMBEDDED WATERSTOP: WATERSTOP SHALL BE 6 INCH EMBEDDED NON-METALLIC GREENSTREAK 732 OR EQUIVALENT FOR THE GESTATION BARN AND GDU BARN AND GREENSTREAK 705 OR EQUIVALENT FOR THE FARROWING BARN. JOINTS SHALL BE WELDED IN ACCORDANCE WITH MANUFACTURING RECOMMENDATIONS AND IN ACCORDANCE WITH WI NRCS SPECIFICATION 4, CONCRETE.
2. EXPANSIVE WATERSTOP: EXPANSIVE WATERSTOP SHALL BE PLACED IN ACCORDANCE WITH MANUFACTURING RECOMMENDATIONS AND IN ACCORDANCE WITH WI NRCS SPECIFICATION 4, CONCRETE. GREENSTREAK HYDROTITE; GREENSTREAK LEAKMASTER LV-1; SIKA SWELL S-2

CONSTRUCTION NOTES:

1. FACTORY CORNERS AND TRANSITIONS SHALL BE USED, LEAVING ONLY STRAIGHT BUTT JOINT SPLICES FOR FIELD WELDING.

INSTALLATION:

1. CENTER THE WATERSTOP ON THE JOINT UNLESS SHOWN OTHERWISE.
2. SECURE THE WATERSTOP ALONG ITS LENGTH AT THE CENTER BULB AND SUFFICIENTLY AT THE WEB TO HOLD IT IN PLACE.
3. PLACE CONCRETE WITHOUT DISPLACING THE WATERSTOP.
4. THOROUGHLY VIBRATE CONCRETE AROUND WATERSTOP TO PREVENT VOIDS.
5. AFTER THE FIRST POUR, CLEAN THE UNEMBEDDED WATERSTOP WEB TO INSURE FULL CONTACT WITH THE SECOND POUR OF CONCRETE.
6. INSTALLATION METHODS SHALL BE IN STRICT COMPLIANCE WITH THE MANUFACTURERS REQUIREMENTS.

SPECIFICATIONS:

1. WORK CONSISTS OF PROVIDING FLEXIBLE WATERSTOPS, EMBEDDED IN CONCRETE WALLS, TO SPAN CONTROL AND/OR CONSTRUCTION JOINTS.
2. WATERSTOP MUST FORM A CONTINUOUS SEAL THROUGHOUT THE STRUCTURE.
3. WATERSTOP IS TO BE MANUFACTURED PVC, THERMOPLASTIC ELASTOMERIC RUBBER, (TPE), OR POLYETHYLENE P.E. MATERIAL WITH A MINIMUM WEB THICKNESS OF 3/16".
4. WATERSTOP IS TO BE FREE OF DIRT, OIL, AND DEFECTS.

SPLICE FABRICATION:

1. PROVIDE FACTORY FABRICATED WATERSTOP CORNERS AND TRANSITIONS LEAVING ONLY STRAIGHT BUTT JOINT SPLICES FOR FIELD FABRICATION, UNLESS SPECIFICALLY APPROVED IN WRITING BY THE MANUFACTURER AND PERFORMED IN ACCORDANCE WITH THEIR SPECIFICATIONS.
2. USE ONLY A SPLICING IRON SPECIFICALLY RECOMMENDED BY THE MANUFACTURER FOR HEAT FUSED WELDING OF ALL SPLICES.
3. WELDS ARE TO EXHIBIT A CONTINUOUS BEAD OF EXCESS MELTED MATERIAL, FREE OF DEFECTS.
4. SPLICES ARE TO BE HEAT WELDED WITH THE CENTER BULB AND RIBS ALIGNED.
5. ADHESIVES, SOLVENTS, LAP JOINTS, AND EDGE WELDING ARE NOT ACCEPTABLE.
6. EMBEDDED WATERSTOPS MAY NOT BE WELDED OR JOINED TO OTHER WATERSTOPS OF DIFFERENT SIZE, CONFIGURATION, OR MATERIAL.

CONTACT INFORMATION:

CIVIL ENGINEER:

RESOURCE ENGINEERING ASSOCIATES
3510 PARMENTER ST, SUITE 100
MIDDLETON, WI 53562

CONTACT:
DAN WIERZBA
608-831-5522

STRUCTURAL ENGINEER:

MP-SQUARED STRUCTURAL ENGINEERS, LLC
583 D'ONOFRIO DRIVE, SUITE 201
MADISON, WI 53719

CONTACT:
ALISSA M. JENNE, P.E.
608-821-4770

To the best of my professional knowledge, judgment and belief, this design and these construction plans meets NRCS standards 313 - Waste Storage Facility. (Date: 10/17)

ROTH FARROWING FACILITY

HOG FACILITY
WAUZEKA, WI
-

(mp)² STRUCTURAL ENGINEERS, LLC
583 D'Onofrio Drive, Suite 201
Madison, WI 53719
Office: 608-821-4770
Fax: 608-821-4780

THE INFORMATION CONTAINED HEREIN IS OF A PROPRIETARY NATURE AND IS SUBMITTED IN CONFIDENCE FOR USE BY THE CLIENTS OF MP-SQUARED STRUCTURAL ENGINEERS, LLC. THIS DOCUMENT HAS BEEN PREPARED FOR (CLIENT) AND IS EXPRESSLY PROHIBITED TO BE USED FOR ANY OTHER PROJECT, PURPOSE, LOCATION, PUBLICATION, REPRODUCTION, PRODUCTION, DISTRIBUTION OR DISSEMINATION IN WHOLE OR IN PART, BY INDIVIDUAL OR ORGANIZATION, WITHOUT WRITTEN CONSENT OF MP-SQUARED STRUCTURAL ENGINEERS, LLC. RECEIPT OR POSSESION OF THIS INFORMATION CONFERS NO RIGHT OR LICENSE TO USE OR DISCLOSE TO OTHERS THE SUBJECT MATTER CONTAINED HEREIN FOR ANY USES BUT AUTHORIZED PURPOSES.

ISSUE

	FOR REVIEW 01.07.2020
	FOR REVIEW 03.16.2020
	FOR REVIEW 04.10.2020
	FOR CONSTRUCTION 04.29.2020

REVISIONS

MP2 JOB #: 1916215WI
CLIENT JOB #:
DRAWN BY: JSA
CHECKED BY: AJ

SHEET CONTENTS
COVER SHEET
STRUCTURAL NOTES

SHEET NUMBER

PLAN NOTES

1. SEE SHEET S0.1 FOR ADDITIONAL NOTES.

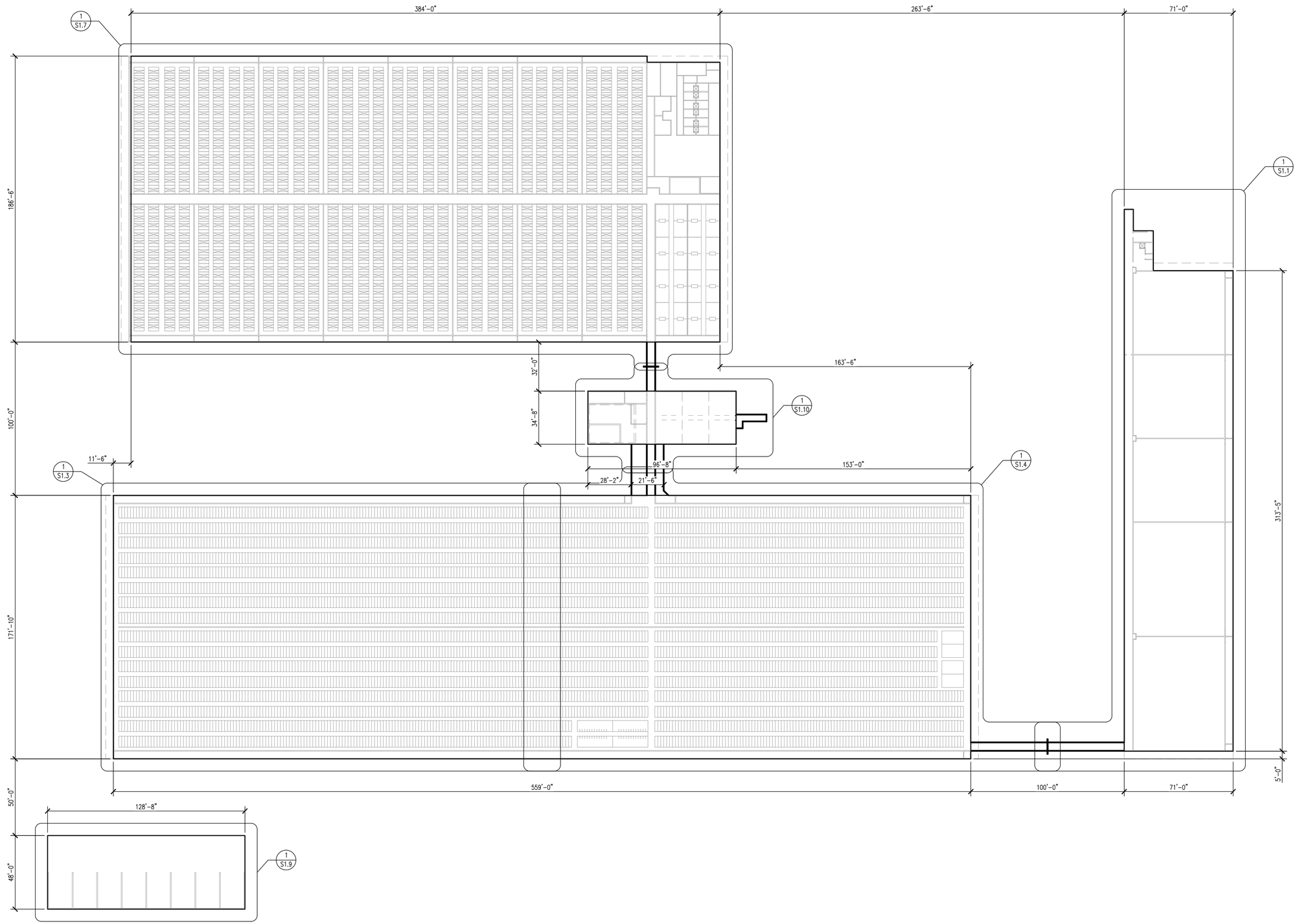

ROTH FARROWING FACILITY

HOG FACILITY
WAUZEKA, WI

-

(mp)² STRUCTURAL ENGINEERS, LLC
583 D'Onofrio Drive, Suite 201
Madison, WI 53719
Office: 608-821-2770
Fax: 608-821-2780

THE INFORMATION CONTAINED HEREIN IS OF A PROPRIETARY NATURE AND IS SUBMITTED IN CONFIDENCE FOR USE ONLY IN THE CONSTRUCTION OF AN ORDERED STRUCTURAL CONSTRUCTION. ALL OTHER USES OR USE IN THE CONSTRUCTION OF OTHER STRUCTURES ARE PROHIBITED WITHOUT THE WRITTEN CONSENT OF MP SQUARED STRUCTURAL ENGINEERS, LLC. THIS DOCUMENT IS THE PROPERTY OF MP SQUARED STRUCTURAL ENGINEERS, LLC. ANY REPRODUCTION WITHOUT WRITTEN CONSENT OF MP SQUARED STRUCTURAL ENGINEERS, LLC.
THE CLIENT RECEIVES A NON-EXCLUSIVE LICENSE TO USE THE DOCUMENT. THE CLIENT HAS THE LICENSE TO USE THE SUBJECT WRITTEN CONTAINED HEREIN FOR ANY USES BUT INTENDED PURPOSES.

ISSUE

	FOR REVIEW 01.07.2020
	FOR REVIEW 03.16.2020
	FOR REVIEW 04.10.2020
	FOR CONSTRUCTION 04.29.2020

REVISIONS

MP2 JOB #: 1916215WI
CLIENT JOB #:
DRAWN BY: JSA
CHECKED BY: AJ

SHEET CONTENTS

OVERALL PLAN VIEW

SHEET NUMBER

S1.0

PLAN NOTES

1. SEE SHEET S0.1 FOR ADDITIONAL NOTES.
2. CURING: ALL CONCRETE FLAT WORK SHALL BE COVERED IMMEDIATELY AND MAINTAINED CONTINUOUSLY WET FOR A MINIMUM OF 7 DAYS AFTER PLACING. CURING SHEETS SHALL BE USED, AND ARE TO REMAIN IN PLACE, DURING THIS PERIOD. CURING COMPOUND MAY BE USED AND MUST BE APPLIED PER MANUFACTURER'S RECOMMENDATIONS.
3. PROVIDE "FLAT TEE" OR "+" WATERSTOP AS SPECIFIED AT SLAB TO WALL JOINT LOCATIONS. WELD AND INSPECT ALL WATERSTOP JOINTS.
4. SEE NOTES SHEET S0.1 FOR WATERSTOP REQUIREMENTS.
5. PER WISCONSIN CONCRETE SPECIFICATION #4, SECTION 6, FORMS INCLUDING THIS KEYWAY FORM MUST REMAIN IN PLACE FOR A MINIMUM OF 24 HOURS AFTER CONCRETE PLACEMENT.
6. LAP HORIZONTAL SLAB AND WALL REINFORCEMENT PER GENERAL NOTES TABLE TYPICAL EXCEPT AT CONTROL AND EXPANSION JOINTS.
7. SEE SHEET S6.1 FOR TYPICAL DETAILS NOT CALLED OUT ON PLAN.
8. SOME FINE LINE RANDOM SHRINKAGE CRACKING MAY DEVELOP HOWEVER PER NRCS 313, ACI 360 & PCA 2008 WITH THE USE OF STEEL AS SHOWN THESE CRACKS ARE EXPECTED TO PERFORM AT A WATERTIGHT LEVEL. LARGER WALL AND FLOOR CRACKS DUE TO IMPROPER CURING METHODS, WEATHER PROTECTION, MIX DESIGN, SUBSTITUTION, DELETION OR MISPLACEMENT OF REINFORCEMENT, IMPROPER MIX DESIGN, OR NATRUAL SHRINKAGE OF CONCRETE SHALL BE REMEDIED AT THE EXPENSE OF THE CONTRACTOR TO THE SATIFACTION OF THE SUPERVISING ENGINEER AND AGENCY.
9. THE CONTRACTOR SHALL INSPECT FOR SHRINKAGE CRACKS GREATER THAN 1/16" AFTER A 28 DAY CURE TIME AND FILL ALL SUCH CRACKS WITH A WATERPROOFING AGENT. CRACK FILLING SHALL BE INCLUDED IN THE CONTRACTORS FEE UNLESS SPECIFICALLY NEGOTIATED OTHERWISE WITH THE CLIENT.

FOUNDATION LEGEND

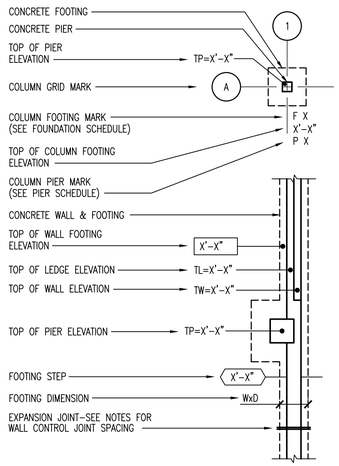

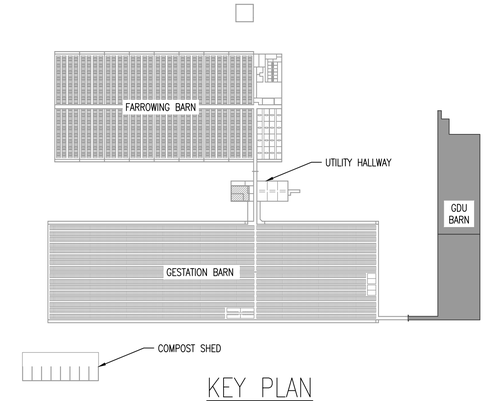

KEY PLAN

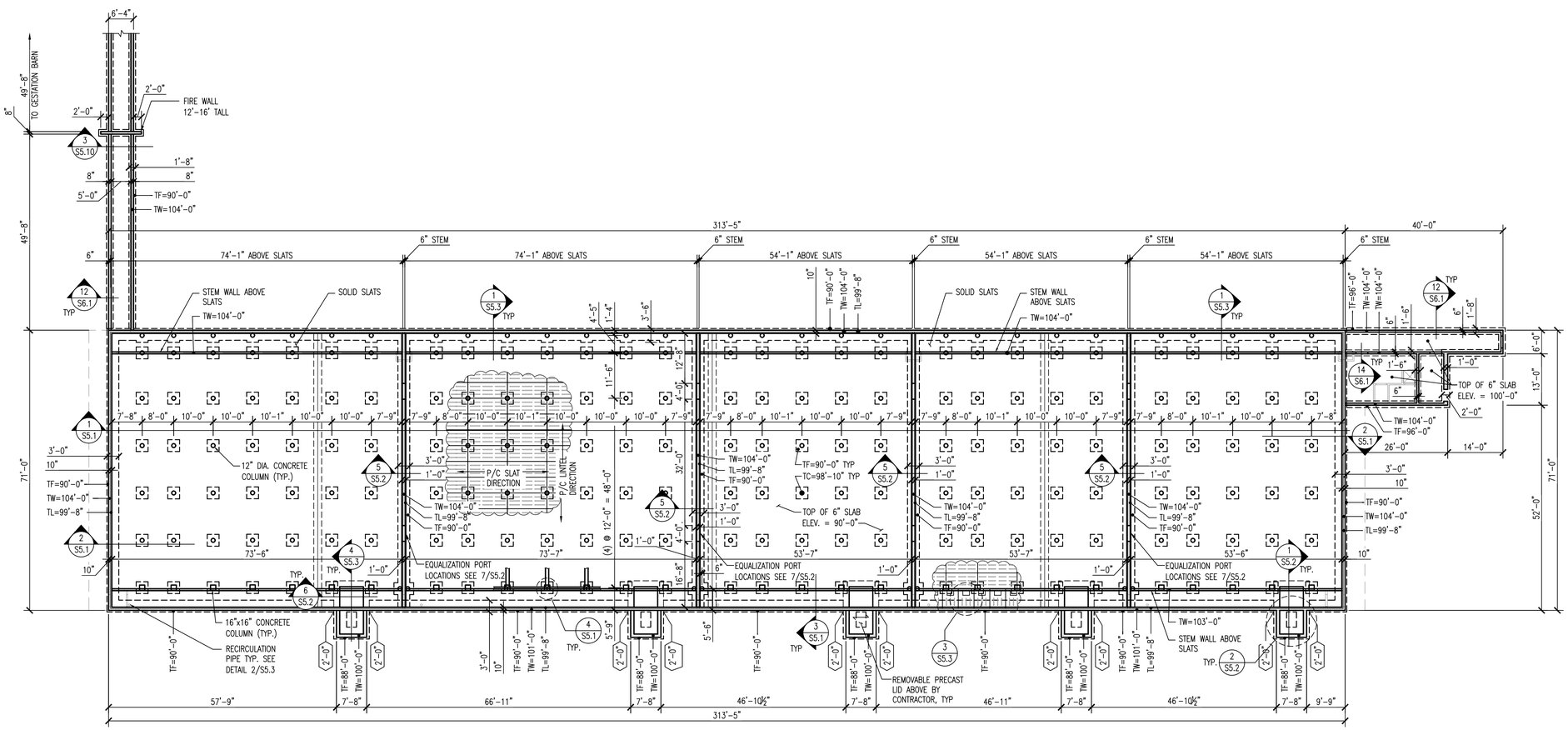

N

1 S1.1 GDU BARN FOUNDATION PLAN

SCALE: 1/16"=1'-0"

ROTH FARROWING FACILITY

HOG FACILITY
WAUZEKA, WI
-

(mp)² STRUCTURAL ENGINEERS, LLC
583 D'Onofrio Drive, Suite 201
Madison, WI 53719
Office: 608-821-2770
Fax: 608-821-2780

THE INFORMATION CONTAINED HEREIN IS OF A PROPRIETARY NATURE AND IS SUBMITTED IN CONFIDENCE FOR USE IN THE CLIENT'S OF AN ISSUED FOR CONSTRUCTION DOCUMENTS, LLC (MP2) OR ANY OTHER PROJECT PARTICIPANT. THE INFORMATION CONTAINED HEREIN IS TO BE USED FOR ONE PROJECT PURPOSE, LOCATION, SCHEDULE, NOTHING IN THIS PROPOSAL SHALL BE CONSTRUED TO GRANT ANY RIGHT OF OWNERSHIP OR OWNERSHIP OF PATENT, WITHOUT WRITTEN CONSENT OF MP STRUCTURAL ENGINEERS, LLC.
THE CLIENT AGREES TO HOLD THE INFORMATION CONTAINED HEREIN, AND TO REFRAIN TO USE OR DISCLOSE TO OTHERS, THE SUBJECT MATTER CONTAINED HEREIN FOR ANY USES BUT INTENDED PURPOSES.

ISSUE

	FOR REVIEW 01.07.2020
	FOR REVIEW 03.16.2020
	FOR REVIEW 04.10.2020
	FOR CONSTRUCTION 04.29.2020

REVISIONS

MP2 JOB #: 1916215WI
CLIENT JOB #:
DRAWN BY: JSA
CHECKED BY: AJ

SHEET CONTENTS

GDU BARN FOUNDATION PLAN

SHEET NUMBER

S1.1

PLAN NOTES

1. SEE SHEET S0.1 FOR ADDITIONAL NOTES.
2. PROVIDE "FLAT TEE" OR "+" WATERSTOP AS SPECIFIED AT SLAB TO WALL JOINT LOCATIONS. WELD AND INSPECT ALL WATERSTOP JOINTS.
3. SEE NOTES SHEET S0.1 FOR WATERSTOP REQUIREMENTS.
4. WEJ = WALL EXPANSION JOINT, SEE DETAIL 7/S6.1.

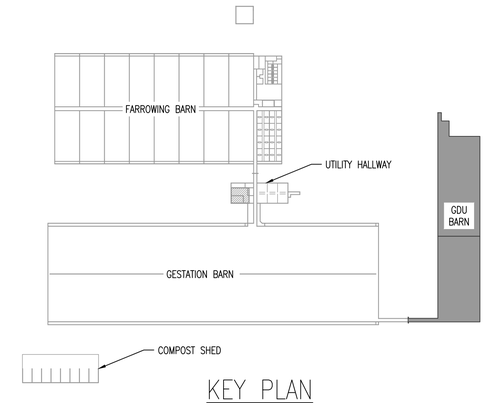

KEY PLAN

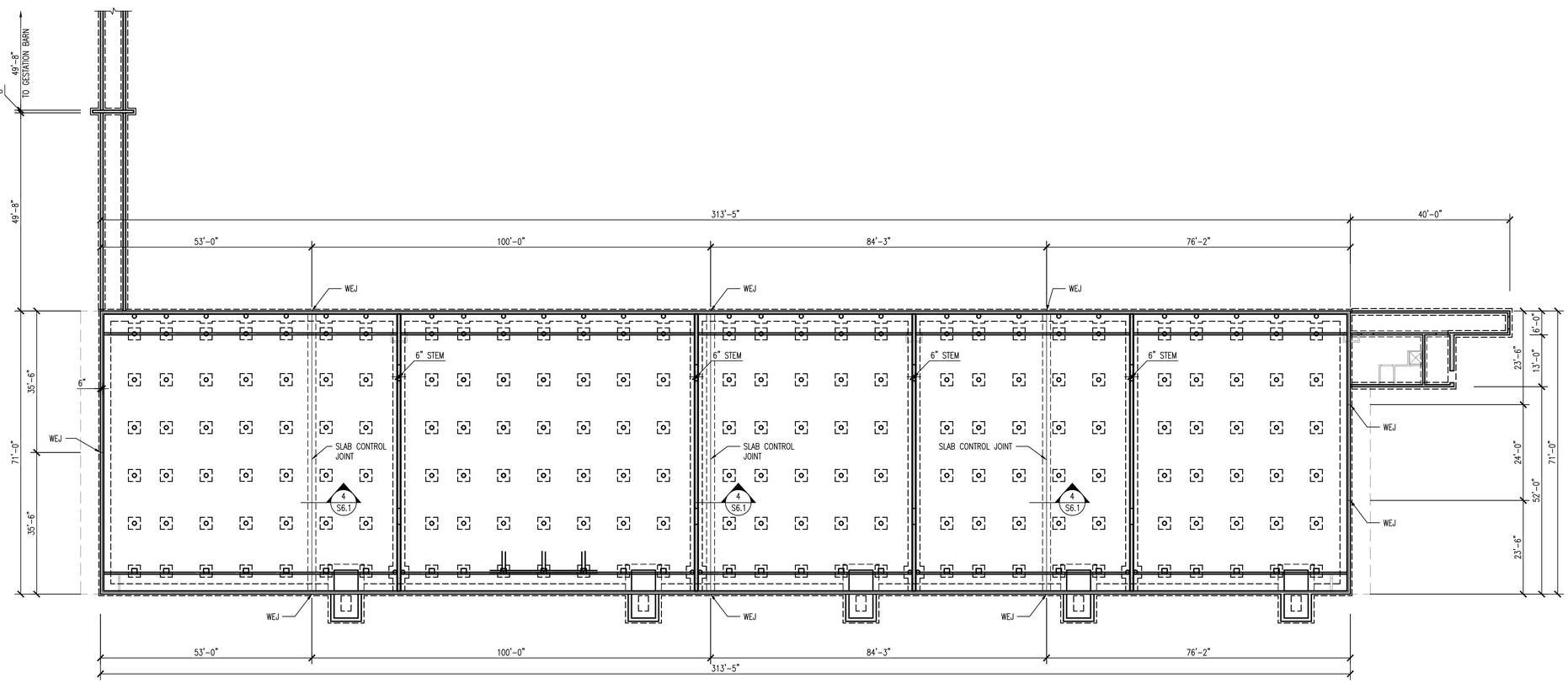

N

1 S1.2 GDU BARN WALL EXPANSION JOINT LOCATIONS

SCALE: 1/16"=1'-0"

ROTH FARROWING FACILITY

HOG FACILITY
WAUZEKA, WI

-

(mp)2 STRUCTURAL ENGINEERS, LLC
583 D'Onofrio Drive, Suite 201
Madison, WI 53719
Office: 608-821-2770
Fax: 608-821-2780

THE INFORMATION CONTAINED HEREIN IS OF A PROPRIETARY NATURE AND IS SUBMITTED IN CONFIDENCE FOR USE ONLY BY THE CLIENT OF MP-SQUARED STRUCTURAL ENGINEERS, LLC AND FOR THE SPECIFIC PROJECT FOR WHICH IT IS PREPARED. ANY OTHER USE OR DISTRIBUTION OF THIS DATA FOR ANY OTHER PROJECT PURPOSE, LOCATION, REALLOCATION, REPRODUCTION, REPRINTING OR REPUBLISHING IS PROHIBITED WITHOUT THE EXPRESS WRITTEN CONSENT OF MP-SQUARED STRUCTURAL ENGINEERS, LLC.
THE CLIENT AGREES TO HOLD MP-SQUARED STRUCTURAL ENGINEERS, LLC HARMLESS FROM ANY DAMAGES TO OTHERS THE SUBJECT MATTER CONTAINED HEREIN FOR ANY USES BUT INTENDED PURPOSES.

ISSUE

	FOR REVIEW 01.07.2020
	FOR REVIEW 03.16.2020
	FOR REVIEW 04.10.2020
	FOR CONSTRUCTION 04.29.2020

REVISIONS

MP2 JOB #: 1916215WI
CLIENT JOB #:
DRAWN BY: JSA
CHECKED BY: AJ

SHEET CONTENTS

GDU BARN WALL EXPANSION JOINT PLAN

SHEET NUMBER

S1.2

PLAN NOTES

1. SEE SHEET S0.1 FOR ADDITIONAL NOTES.
2. CURING: ALL CONCRETE FLAT WORK SHALL BE COVERED IMMEDIATELY AND MAINTAINED CONTINUOUSLY WET FOR A MINIMUM OF 7 DAYS AFTER PLACING. CURING SHEETS SHALL BE USED, AND ARE TO REMAIN IN PLACE, DURING THIS PERIOD. CURING COMPOUND MAY BE USED AND MUST BE APPLIED PER MANUFACTURER'S RECOMMENDATIONS.
3. PROVIDE "FLAT TEE" OR "+" WATERSTOP AS SPECIFIED AT SLAB TO WALL JOINT LOCATIONS. WELD AND INSPECT ALL WATERSTOP JOINTS.
4. SEE NOTES SHEET S0.1 FOR WATERSTOP REQUIREMENTS.
5. PER WISCONSIN CONCRETE SPECIFICATION #4, SECTION 6, FORMS INCLUDING THIS KEYWAY FORM MUST REMAIN IN PLACE FOR A MINIMUM OF 24 HOURS AFTER CONCRETE PLACEMENT.
6. LAP HORIZONTAL SLAB AND WALL REINFORCEMENT PER GENERAL NOTES TABLE TYPICAL EXCEPT AT CONTROL AND EXPANSION JOINTS.
7. SEE SHEET S6.1 FOR TYPICAL DETAILS NOT CALLED OUT ON PLAN.
8. SOME FINE LINE RANDOM SHRINKAGE CRACKING MAY DEVELOP HOWEVER PER NRCS 313, ACI 360 & PCA 2008 WITH THE USE OF STEEL AS SHOWN THESE CRACKS ARE EXPECTED TO PERFORM AT A WATERTIGHT LEVEL. LARGER WALL AND FLOOR CRACKS DUE TO IMPROPER CURING METHODS, WEATHER PROTECTION, MIX DESIGN, SUBSTITUTION, DELETION OR MISPLACEMENT OF REINFORCEMENT, IMPROPER MIX DESIGN, OR NATRUAL SHRINKAGE OF CONCRETE SHALL BE REMEDIED AT THE EXPENSE OF THE CONTRACTOR TO THE SATIFACTION OF THE SUPERVISING ENGINEER AND AGENCY.
9. THE CONTRACTOR SHALL INSPECT FOR SHRINKAGE CRACKS GREATER THAN 1/16" AFTER A 28 DAY CURE TIME AND FILL ALL SUCH CRACKS WITH A WATERPROOFING AGENT. CRACK FILLING SHALL BE INCLUDED IN THE CONTRACTORS FEE UNLESS SPECIFICALLY NEGOTIATED OTHERWISE WITH THE CLIENT.
10. BUTTRESS WALLS DESIGNED FOR SHEAR LOAD OF 23,000 LBS AND OVERTURNING FORCE OF 26,550 LBS. BUILDING SUPPLIER MUST PROVIDE MP SQUARED WITH FINAL LOADING REQUIREMENTS FOR BUTTRESS WALLS.

FOUNDATION LEGEND

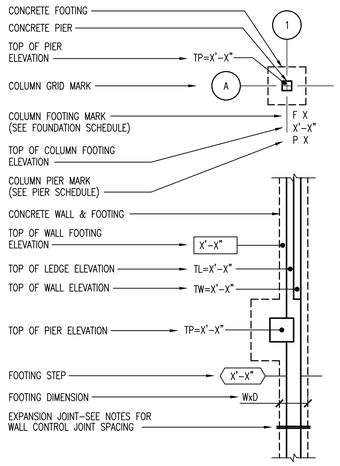

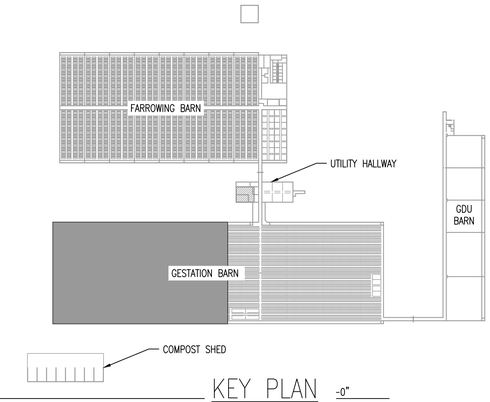

KEY PLAN -0"

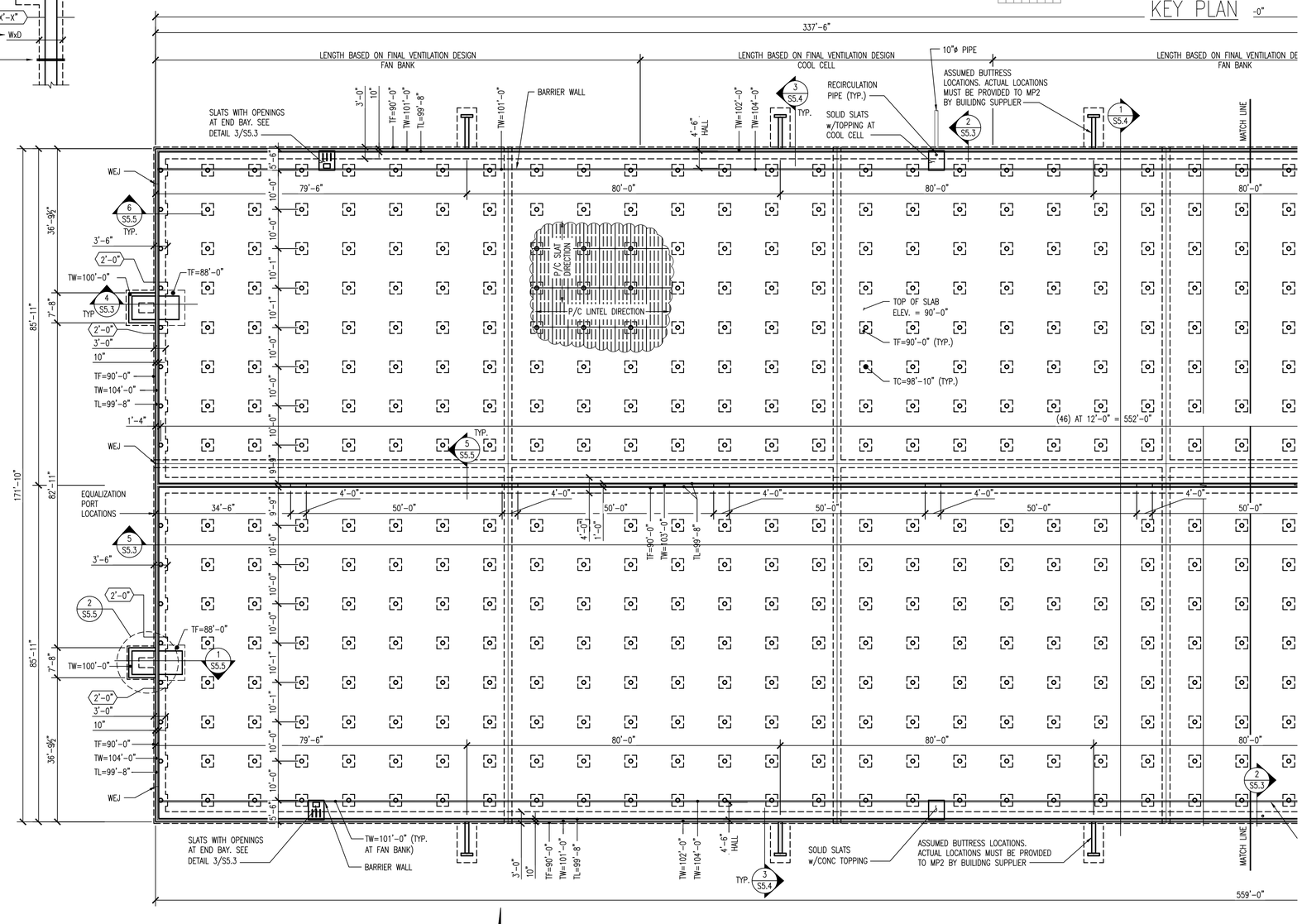

N

1 S1.3 GESTATION BARN FOUNDATION PLAN – WEST

SCALE: 1/16"=1'-0"

ROTH FARROWING FACILITY
HOG FACILITY
WAUZEKA, WI
-

(mp)² STRUCTURAL ENGINEERS, LLC
583 D'Onofrio Drive, Suite 201
Madison, WI 53719
Office: 608-821-9770
Fax: 608-821-4780

THE INFORMATION CONTAINED HEREIN IS OF A PROPRIETARY NATURE AND IS SUBMITTED IN CONFIDENCE FOR USE ON THIS PROJECT ONLY. MP SQUARED STRUCTURAL ENGINEERS, LLC, DO NOT WARRANT THE ACCURACY OF THE INFORMATION CONTAINED HEREIN FOR ANY OTHER PURPOSE. ANY USE OF THIS MATERIAL FOR ANY OTHER PURPOSE, WITHOUT THE WRITTEN PERMISSION OF MP SQUARED STRUCTURAL ENGINEERS, LLC, IS PROHIBITED. THIS MATERIAL MAY BE REPRODUCED FOR USE ON THIS PROJECT WITHOUT WRITTEN CONSENT OF MP SQUARED STRUCTURAL ENGINEERS, LLC.
THIS MATERIAL MAY BE REPRODUCED FOR USE ON THIS PROJECT. ANY PERSON WHO PLANS TO USE OR DISCLOSE TO OTHERS THE SUBJECT MATTER CONTAINED HEREIN FOR ANY USES BUT THOSE INTENDED PURPOSES.

ISSUE

	FOR REVIEW 01.07.2020
	FOR REVIEW 03.16.2020
	FOR REVIEW 04.10.2020
	FOR CONSTRUCTION 04.29.2020

REVISIONS

MP2 JOB #: 1916215WI
CLIENT JOB #:
DRAWN BY: JSA
CHECKED BY: AJ

SHEET CONTENTS

PARTIAL GESTATION BARN FOUNDATION PLAN

SHEET NUMBER

S1.3

PLAN NOTES

1. SEE SHEET S0.1 FOR ADDITIONAL NOTES.
2. CURING: ALL CONCRETE FLAT WORK SHALL BE COVERED IMMEDIATELY AND MAINTAINED CONTINUOUSLY WET FOR A MINIMUM OF 7 DAYS AFTER PLACING. CURING SHEETS SHALL BE USED, AND ARE TO REMAIN IN PLACE, DURING THIS PERIOD. CURING COMPOUND MAY BE USED AND MUST BE APPLIED PER MANUFACTURER'S RECOMMENDATIONS.
3. PROVIDE "FLAT TEE" OR "+" WATERSTOP AS SPECIFIED AT SLAB TO WALL JOINT LOCATIONS. WELD AND INSPECT ALL WATERSTOP JOINTS.
4. SEE NOTES SHEET S0.1 FOR WATERSTOP REQUIREMENTS.
5. PER WISCONSIN CONCRETE SPECIFICATION #4, SECTION 6, FORMS INCLUDING THIS KEYWAY FORM MUST REMAIN IN PLACE FOR A MINIMUM OF 24 HOURS AFTER CONCRETE PLACEMENT.
6. LAP HORIZONTAL SLAB AND WALL REINFORCEMENT PER GENERAL NOTES TABLE TYPICAL EXCEPT AT CONTROL AND EXPANSION JOINTS.
7. SEE SHEET S6.1 FOR TYPICAL DETAILS NOT CALLED OUT ON PLAN.
8. SOME FINE LINE RANDOM SHRINKAGE CRACKING MAY DEVELOP HOWEVER PER NRCS 313, ACI 360 & PCA 2008 WITH THE USE OF STEEL AS SHOWN THESE CRACKS ARE EXPECTED TO PERFORM AT A WATERTIGHT LEVEL. LARGER WALL AND FLOOR CRACKS DUE TO IMPROPER CURING METHODS, WEATHER PROTECTION, MIX DESIGN, SUBSTITUTION, DELETION OR MISPLACEMENT OF REINFORCEMENT, IMPROPER MIX DESIGN, OR NATRUAL SHRINKAGE OF CONCRETE SHALL BE REMEDIED AT THE EXPENSE OF THE CONTRACTOR TO THE SATIFACTION OF THE SUPERVISING ENGINEER AND AGENCY.
9. THE CONTRACTOR SHALL INSPECT FOR SHRINKAGE CRACKS GREATER THAN 1/16" AFTER A 28 DAY CURE TIME AND FILL ALL SUCH CRACKS WITH A WATERPROOFING AGENT. CRACK FILLING SHALL BE INCLUDED IN THE CONTRACTORS FEE UNLESS SPECIFICALLY NEGOTIATED OTHERWISE WITH THE CLIENT.
10. BUTTRESS WALLS DESIGNED FOR SHEAR LOAD OF 23,000 LBS AND OVERTURNING FORCE OF 26,550 LBS. BUILDING SUPPLIER MUST PROVIDE MP SQUARED WITH FINAL LOADING REQUIREMENTS FOR BUTTRESS WALLS.

FOUNDATION LEGEND

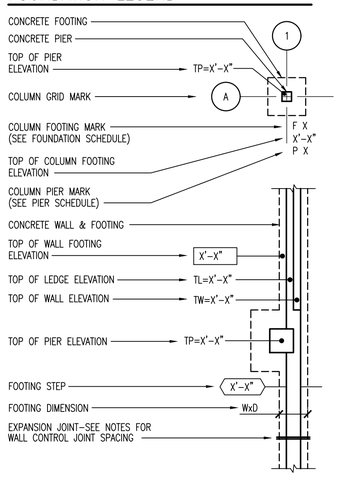

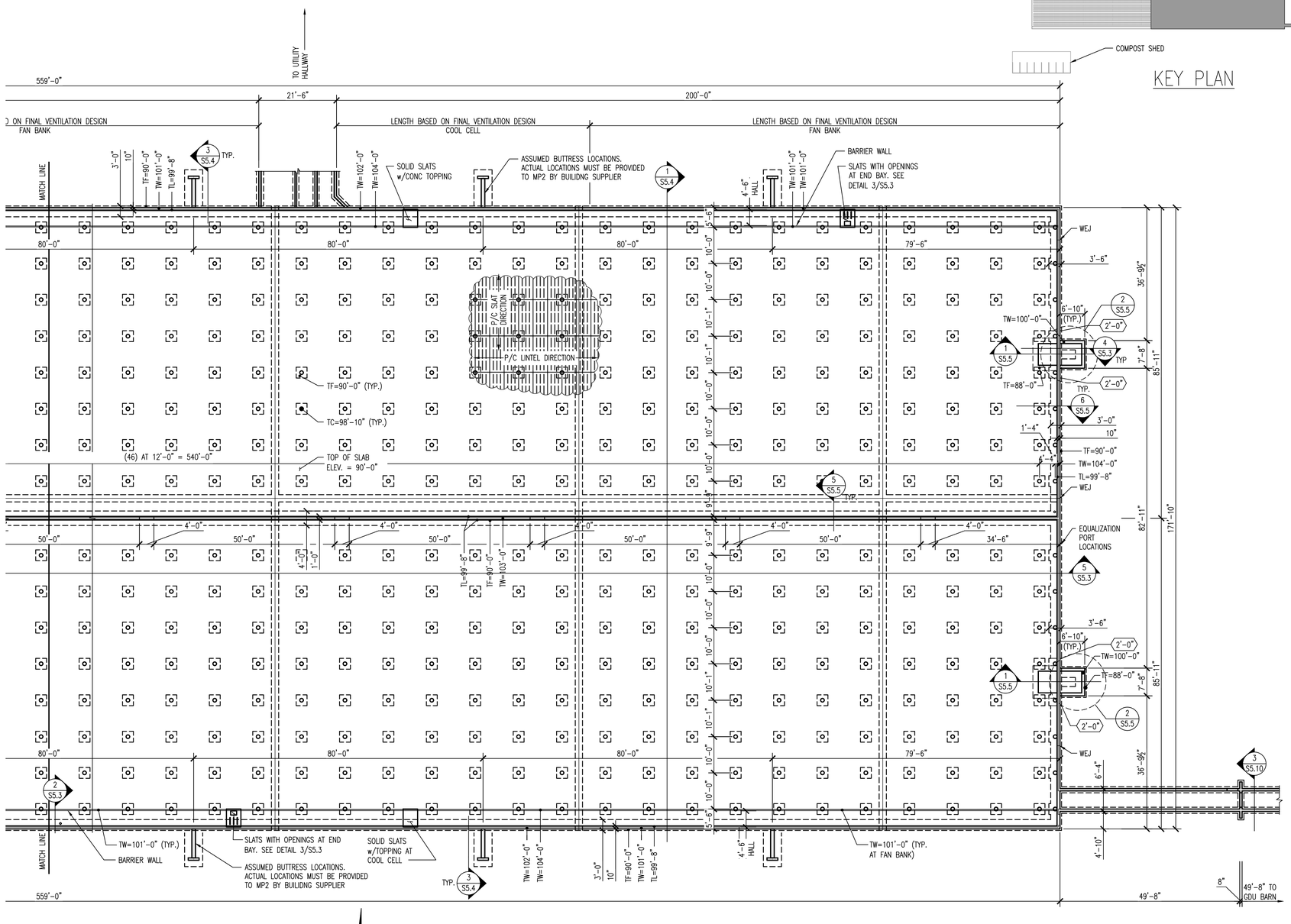

N

1 S1.4 GESTATION BARN FOUNDATION PLAN – EAST

SCALE: 1/16"=1'-0"

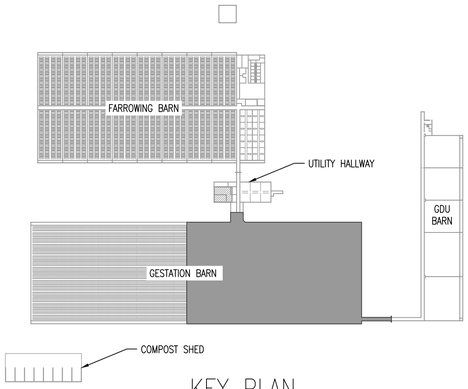

KEY PLAN

ROTH FARROWING FACILITY
HOG FACILITY
WAUZEKA, WI
-

(mp)² STRUCTURAL ENGINEERS, LLC
583 D'Onofrio Drive, Suite 201
Madison, WI 53719
Office: 608-821-0773
Fax: 608-821-0780

THE INFORMATION CONTAINED HEREIN IS OF A PROPRIETARY NATURE AND IS SUBMITTED IN CONFIDENCE FOR USE ONLY BY THE CLIENT OF MP SQUARED STRUCTURAL ENGINEERS, LLC. THIS INFORMATION MAY NOT BE DISCLOSED TO OTHERS OR REPRODUCED IN ANY FORM WITHOUT THE WRITTEN CONSENT OF MP SQUARED STRUCTURAL ENGINEERS, LLC. THIS INFORMATION MAY NOT BE USED FOR ANY PURPOSE OTHER THAN THE PROJECT DESCRIBED HEREIN WITHOUT THE WRITTEN CONSENT OF MP SQUARED STRUCTURAL ENGINEERS, LLC.

ISSUE

	FOR REVIEW 01.07.2020
	FOR REVIEW 03.16.2020
	FOR REVIEW 04.10.2020
	FOR CONSTRUCTION 04.29.2020

REVISIONS

MP2 JOB #: 1916215WI
CLIENT JOB #:
DRAWN BY: JSA
CHECKED BY: AJ

SHEET CONTENTS

PARTIAL GESTATION BARN FOUNDATION PLAN

SHEET NUMBER

S1.4

PLAN NOTES

1. SEE SHEET S0.1 FOR ADDITIONAL NOTES.
2. PROVIDE "FLAT TEE" OR "+" WATERSTOP AS SPECIFIED AT SLAB TO WALL JOINT LOCATIONS. WELD AND INSPECT ALL WATERSTOP JOINTS.
3. SEE NOTES SHEET S0.1 FOR WATERSTOP REQUIREMENTS.
4. WEJ = WALL EXPANSION JOINT, SEE DETAIL 7/S6.1.

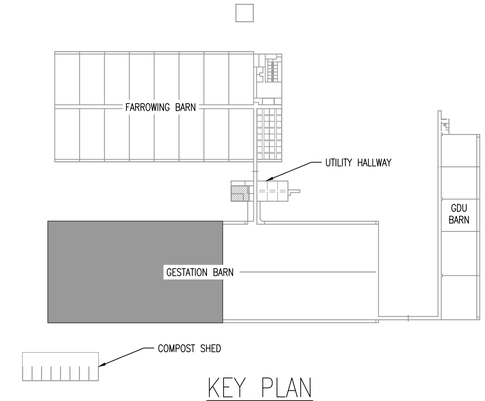

KEY PLAN

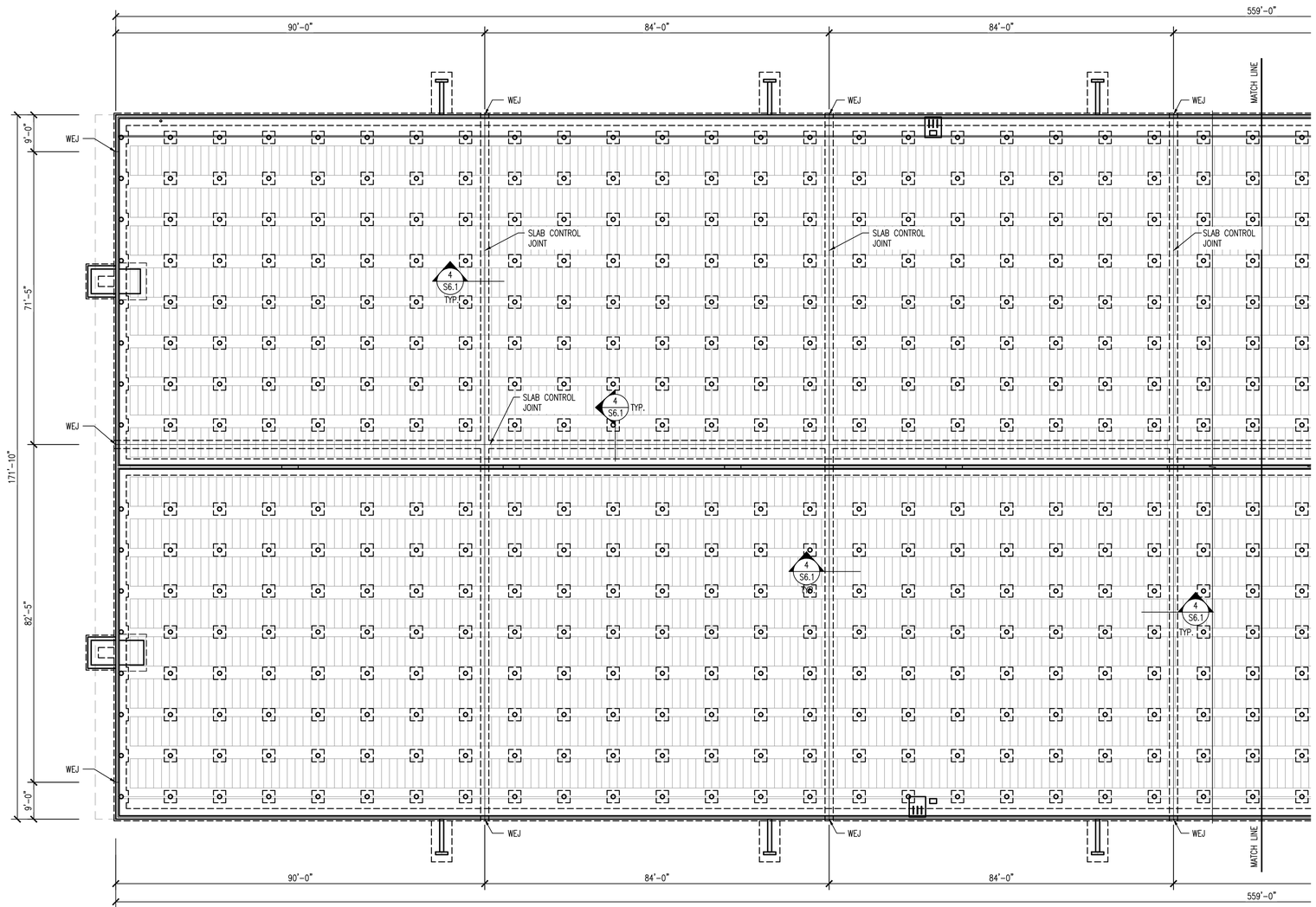

N

1 / S1.5 GESTATION BARN WALL EXPANSION JOINT LOCATIONS – WEST

SCALE: 1/16"=1'-0"

ROTH FARROWING FACILITY

HOG FACILITY
WAUZEKA, WI

-

(mp)2 STRUCTURAL ENGINEERS, LLC
583 D'Onofrio Drive, Suite 201
Madison, WI 53719
Office: 608-821-0770
Fax: 608-821-0780

THE INFORMATION CONTAINED HEREIN IS OF A PROPRIETARY NATURE AND IS SUBMITTED IN CONFIDENCE FOR USE ONLY WITHIN THE SCOPE OF AN ISSUED STRUCTURAL CONTRACT. NO USE OR DISCLOSURE OF THIS INFORMATION MAY BE MADE IN ANY OTHER CONTEXT WITHOUT THE EXPRESS WRITTEN PERMISSION OF MP2 STRUCTURAL ENGINEERS, LLC. THIS DOCUMENT IS INSTRUMENT OF PROFESSIONAL SERVICE. NO PART OF THIS DOCUMENT MAY BE REPRODUCED, STORED IN A RETRIEVAL SYSTEM, OR TRANSMITTED IN ANY FORM OR BY ANY MEANS, ELECTRONIC, MECHANICAL, PHOTOCOPYING, RECORDING OR OTHERWISE, WITHOUT WRITTEN CONSENT OF MP2 STRUCTURAL ENGINEERS, LLC.
THE INFORMATION CONTAINED HEREIN IS INTENDED SOLELY FOR THE PARTIES TO USE OR DISCLOSE TO OTHERS THE SUBJECT MATTER CONTAINED HEREIN FOR ANY USES BUT INTENDED PURPOSES.

ISSUE

	FOR REVIEW 01.07.2020
	FOR REVIEW 03.16.2020
	FOR REVIEW 04.10.2020
	FOR CONSTRUCTION 04.29.2020

REVISIONS

MP2 JOB #: 1916215WI
CLIENT JOB #:
DRAWN BY: JSA
CHECKED BY: AJ

SHEET CONTENTS

GESTATION BARN WALL EXPANSION JOINT PLAN

SHEET NUMBER

S1.5

PLAN NOTES

1. SEE SHEET S0.1 FOR ADDITIONAL NOTES.
2. PROVIDE "FLAT TEE" OR "+" WATERSTOP AS SPECIFIED AT SLAB TO WALL JOINT LOCATIONS. WELD AND INSPECT ALL WATERSTOP JOINTS.
3. SEE NOTES SHEET S0.1 FOR WATERSTOP REQUIREMENTS.
4. WEJ = WALL EXPANSION JOINT, SEE DETAIL 7/S6.1.

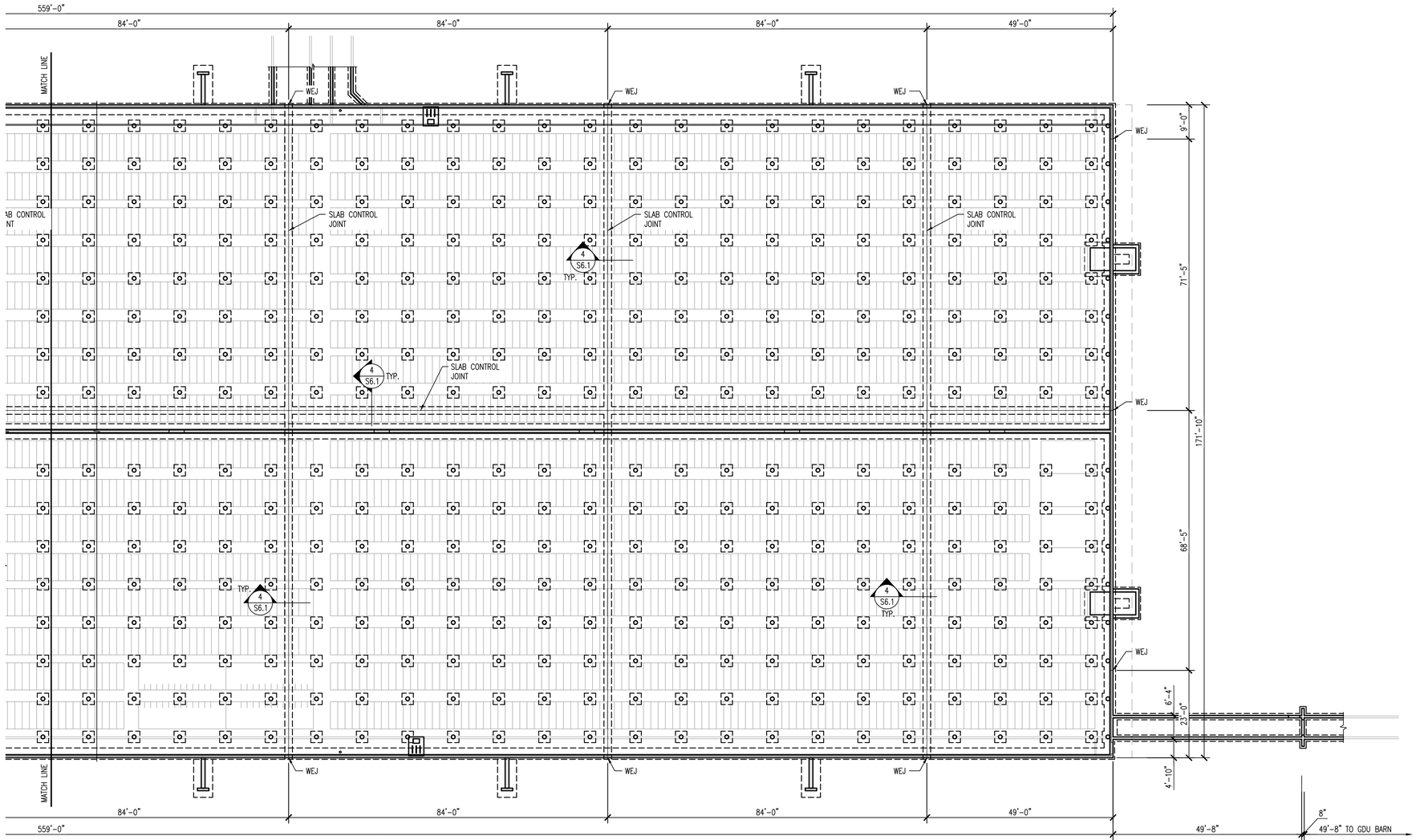

N

1 / S1.6 GESTATION BARN WALL EXPANSION JOINT LOCATIONS – EAST

SCALE: 1/16"=1'-0"

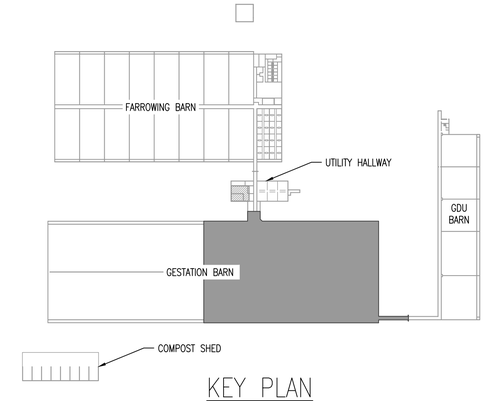

KEY PLAN

ROTH FARROWING FACILITY

HOG FACILITY
WAUZEKA, WI
-

(mp)2 STRUCTURAL ENGINEERS, LLC
583 D'Onofrio Drive, Suite 201
Madison, WI 53719
Office: 608-821-0770
Fax: 608-821-0780

THE INFORMATION CONTAINED HEREIN IS OF A PROPRIETARY NATURE AND IS SUBMITTED IN CONFIDENCE FOR USE ONLY BY THE CLIENT OF MP2 STRUCTURAL ENGINEERS, LLC. NO OTHER USE OR USE BY OTHERS IS PERMITTED WITHOUT THE WRITTEN CONSENT OF MP2 STRUCTURAL ENGINEERS, LLC. THIS DOCUMENT IS INTENDED FOR THE SPECIFIC PROJECT, LOCATION, AND PURPOSE DESCRIBED HEREIN. ANY REUSE OF THIS DOCUMENT FOR OTHER PROJECTS, LOCATIONS, OR PURPOSES IS PROHIBITED WITHOUT WRITTEN CONSENT OF MP2 STRUCTURAL ENGINEERS, LLC. THE INFORMATION CONTAINED HEREIN IS PROVIDED IN ELECTRONIC FORMAT. ANY REUSE OF THE ISSUED FILE, EVEN THE SUBJECT MATTER CONTAINED HEREIN FOR ANY USES BUT INTENDED PURPOSES.

ISSUE

	FOR REVIEW 01.07.2020
	FOR REVIEW 03.16.2020
	FOR REVIEW 04.10.2020
	FOR CONSTRUCTION 04.29.2020

REVISIONS

MP2 JOB #: 1916215WI
CLIENT JOB #:
DRAWN BY: JSA
CHECKED BY: AJ

SHEET CONTENTS

GESTATION BARN WALL EXPANSION JOINT PLAN

SHEET NUMBER

S1.6

PLAN NOTES

1. SEE SHEET S0.1 FOR ADDITIONAL NOTES.
2. CURING: ALL CONCRETE FLAT WORK SHALL BE COVERED IMMEDIATELY AND MAINTAINED CONTINUOUSLY WET FOR A MINIMUM OF 7 DAYS AFTER PLACING. CURING SHEETS SHALL BE USED, AND ARE TO REMAIN IN PLACE, DURING THIS PERIOD. CURING COMPOUND MAY BE USED AND MUST BE APPLIED PER MANUFACTURER'S RECOMMENDATIONS.
3. PROVIDE "FLAT TEE" OR "+" WATERSTOP AS SPECIFIED AT SLAB TO WALL JOINT LOCATIONS. WELD AND INSPECT ALL WATERSTOP JOINTS.
4. SEE NOTES SHEET S0.1 FOR WATERSTOP REQUIREMENTS.
5. PER WISCONSIN CONCRETE SPECIFICATION #4, SECTION 6, FORMS INCLUDING THIS KEYWAY FORM MUST REMAIN IN PLACE FOR A MINIMUM OF 24 HOURS AFTER CONCRETE PLACEMENT.
6. LAP HORIZONTAL SLAB AND WALL REINFORCEMENT PER GENERAL NOTES TABLE TYPICAL EXCEPT AT CONTROL AND EXPANSION JOINTS.
7. SEE SHEET S6.1 FOR TYPICAL DETAILS NOT CALLED OUT ON PLAN.
8. SOME FINE LINE RANDOM SHRINKAGE CRACKING MAY DEVELOP HOWEVER PER NRCS 313, ACI 360 & PCA 2008 WITH THE USE OF STEEL AS SHOWN THESE CRACKS ARE EXPECTED TO PERFORM AT A WATERTIGHT LEVEL. LARGER WALL AND FLOOR CRACKS DUE TO IMPROPER CURING METHODS, WEATHER PROTECTION, MIX DESIGN, SUBSTITUTION, DELETION OR MISPLACEMENT OF REINFORCEMENT, IMPROPER MIX DESIGN, OR NATRUAL SHRINKAGE OF CONCRETE SHALL BE REMEDIED AT THE EXPENSE OF THE CONTRACTOR TO THE SATIFACTION OF THE SUPERVISING ENGINEER AND AGENCY.
9. THE CONTRACTOR SHALL INSPECT FOR SHRINKAGE CRACKS GREATER THAN 1/16" AFTER A 28 DAY CURE TIME AND FILL ALL SUCH CRACKS WITH A WATERPROOFING AGENT. CRACK FILLING SHALL BE INCLUDED IN THE CONTRACTORS FEE UNLESS SPECIFICALLY NEGOTIATED OTHERWISE WITH THE CLIENT.

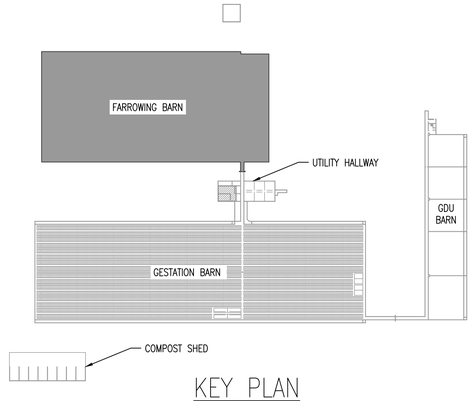

KEY PLAN

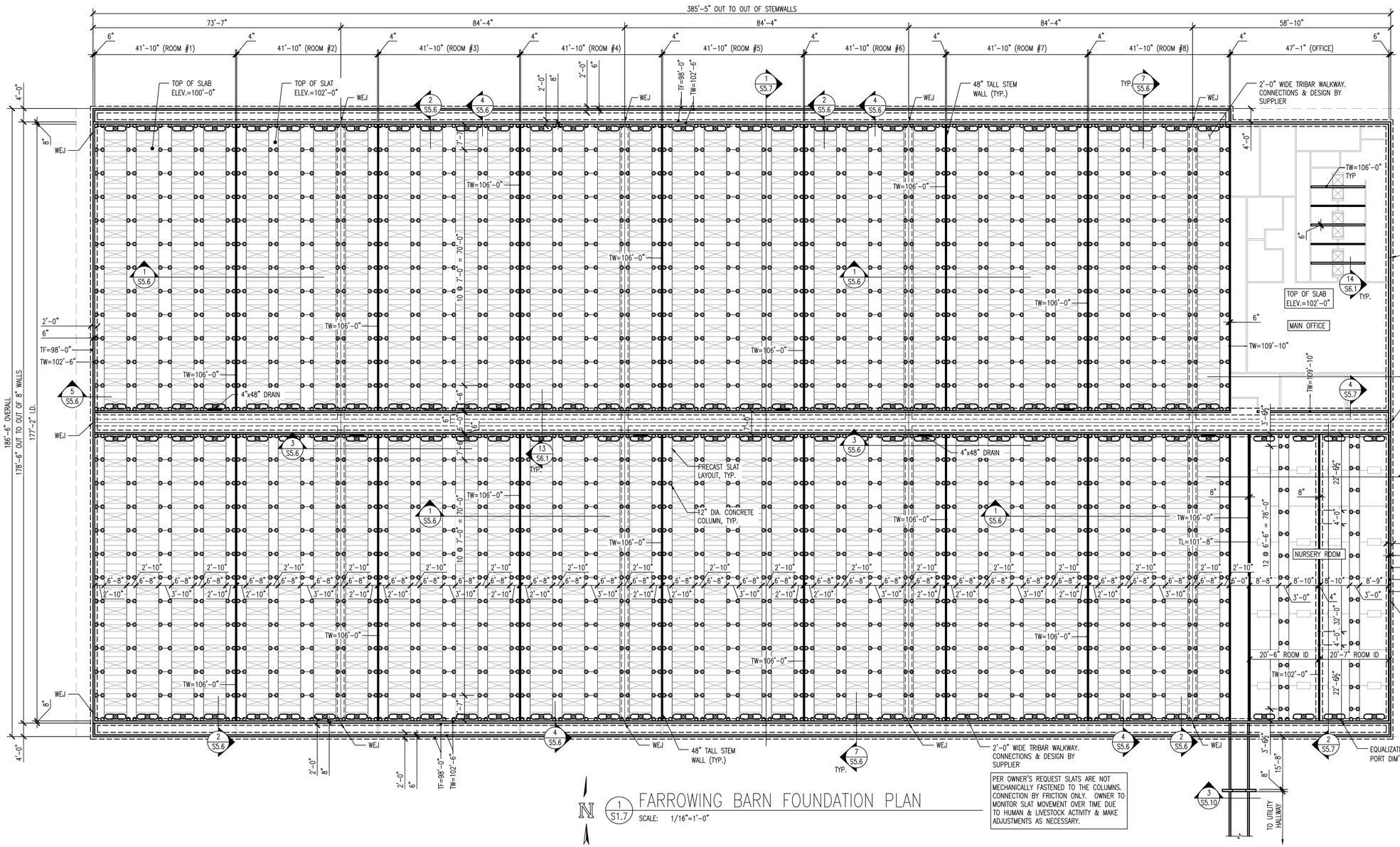

FOUNDATION LEGEND

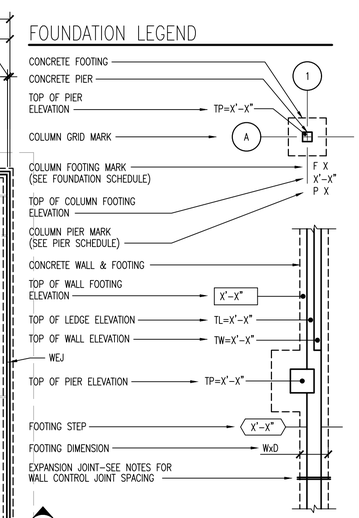

PER OWNER'S REQUEST SLATS ARE NOT MECHANICALLY FASTENED TO THE COLUMNS. CONNECTION BY FRICTION ONLY. OWNER TO MONITOR SLAT MOVEMENT OVER TIME DUE TO HUMAN & LIVESTOCK ACTIVITY & MAKE ADJUSTMENTS AS NECESSARY.

N

1 S1.7 FARROWING BARN FOUNDATION PLAN

SCALE: 1/16"=1'-0"

ROTH FARROWING FACILITY

HOG FACILITY
WAUZEKA, WI
-

(mp)² STRUCTURAL ENGINEERS, LLC
583 D'Onofrio Drive, Suite 201
Madison, WI 53719
Office: 608-821-0800
Fax: 608-821-0793

THE INFORMATION CONTAINED HEREIN IS OF A PROPRIETARY NATURE AND IS SUBMITTED IN CONFIDENCE FOR USE ONLY BY THE CLIENT OF MP SQUARED STRUCTURAL ENGINEERS, LLC AND THE ARCHITECT OF RECORD. THE CLIENT AND ARCHITECT OF RECORD ACKNOWLEDGE THAT THIS DOCUMENT IS FOR AN INTENDED PROJECT PURPOSE, LOCATION, AND SCHEDULE. NO REPRODUCTION, REPRESENTATION OR DISTRIBUTION OF THIS DOCUMENT OR ANY PART THEREOF IS PERMITTED WITHOUT WRITTEN CONSENT OF MP SQUARED STRUCTURAL ENGINEERS, LLC. THE CLIENT AND ARCHITECT OF RECORD ACKNOWLEDGE THAT THEY HAVE NO RIGHTS TO USE OR DISCLOSE TO OTHERS THE SUBJECT MATTER CONTAINED HEREIN FOR ANY USES BUT INTENDED PURPOSES.

ISSUE

FOR REVIEW 01.07.2020
FOR REVIEW 03.16.2020
FOR REVIEW 04.10.2020
FOR CONSTRUCTION 04.29.2020

REVISIONS

MP2 JOB #: 1916215WI
CLIENT JOB #:
DRAWN BY: JSA
CHECKED BY: AJ

SHEET CONTENTS

FARROWING BARN FOUNDATION PLAN

SHEET NUMBER

S1.7

PLAN NOTES

1. SEE SHEET S0.1 FOR ADDITIONAL NOTES.
2. PROVIDE "FLAT TEE" OR "+" WATERSTOP AS SPECIFIED AT SLAB TO WALL JOINT LOCATIONS. WELD AND INSPECT ALL WATERSTOP JOINTS.
3. SEE NOTES SHEET S0.1 FOR WATERSTOP REQUIREMENTS.
4. WEJ = WALL EXPANSION JOINT, SEE DETAIL 7/S6.1.

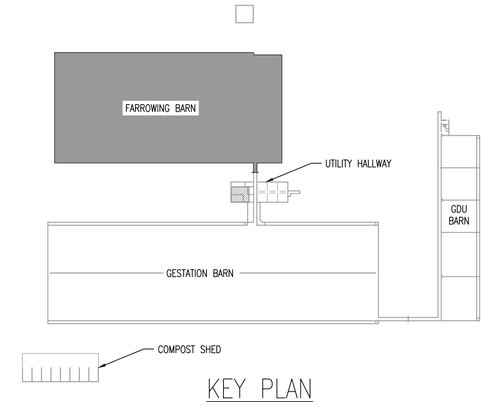

KEY PLAN

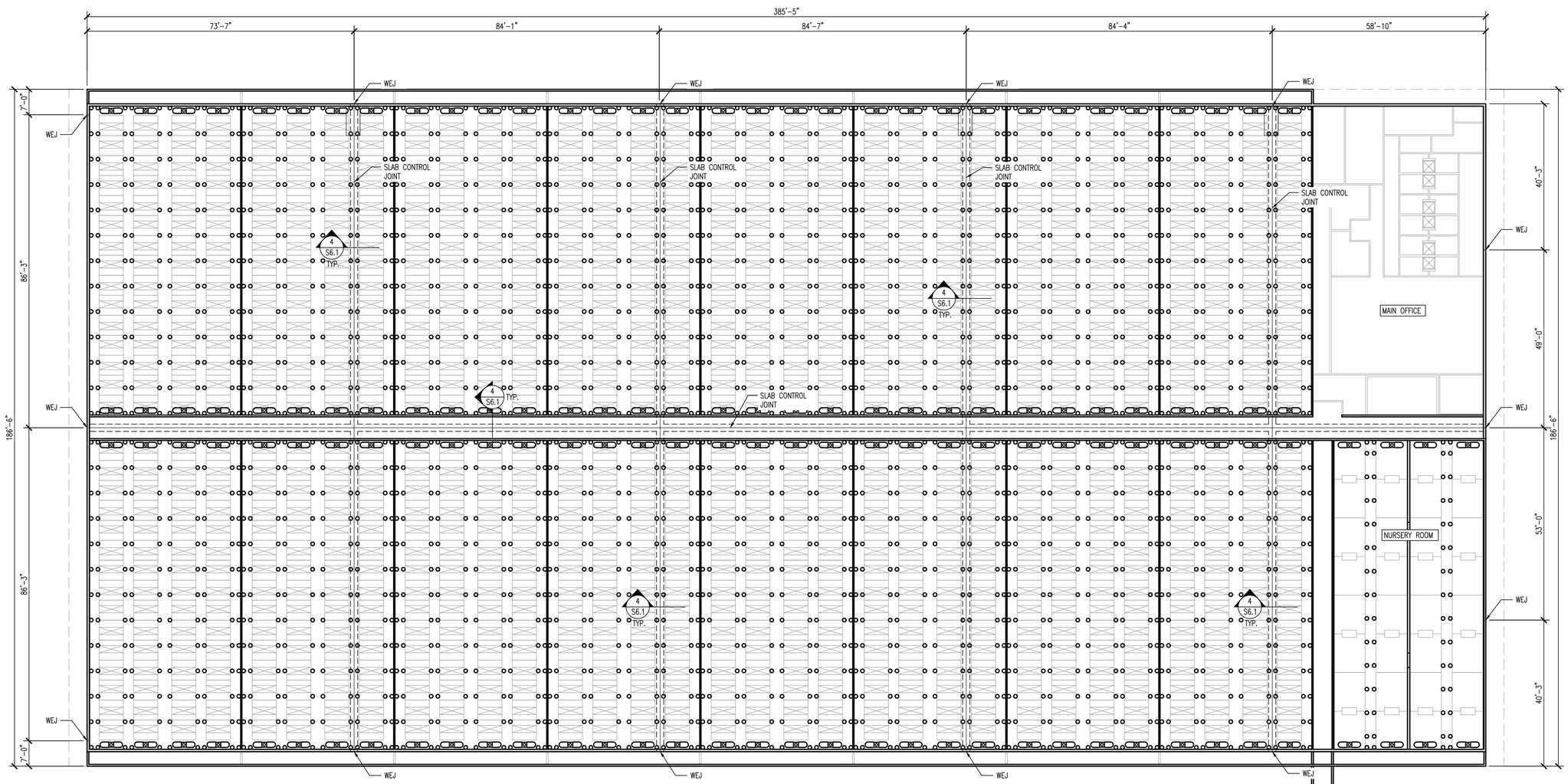

N

1 S1.8 FARROWING BARN WALL EXPANSION JOINT LOCATIONS

SCALE: 1/16"=1'-0"

ROTH FARROWING FACILITY

HOG FACILITY
WAUZEKA, WI

-

(mp)² STRUCTURAL ENGINEERS, LLC
583 D'Onofrio Drive, Suite 201
Madison, WI 53719
Office: 608-821-2770
Fax: 608-821-2780

THE INFORMATION CONTAINED HEREIN IS OF A PROPRIETARY NATURE AND IS SUBMITTED IN CONFIDENCE FOR USE ONLY WITHIN THE SCOPE OF AN ISSUED CONSTRUCTION CONTRACT. ALL OTHER USE OR REPRODUCTION WITHOUT WRITTEN CONSENT OF MP-SQUARED STRUCTURAL ENGINEERS, LLC, IS PROHIBITED. THIS DOCUMENT IS INTENDED FOR THE SPECIFIED APPLICATION ONLY AND IT IS NOT TO BE USED FOR ANY OTHER PROJECT, PURPOSE, LOCATION, PUBLICATION, REPRODUCTION, PRODUCTION, OR ANY OTHER USE WITHOUT WRITTEN CONSENT OF MP-SQUARED STRUCTURAL ENGINEERS, LLC. THIS DOCUMENT IS TRANSMITTED TO YOU IN ELECTRONIC FORMAT AT YOUR REQUEST FOR YOUR CONVENIENCE. YOUR USE OF THIS DOCUMENT IS SUBJECT TO THE ABOVE RESTRICTIONS. YOUR RECEIPT OF THIS DOCUMENT IN ELECTRONIC FORMAT DOES NOT CONSTITUTE YOUR RECEIPT OF AN ISSUED CONTRACT DOCUMENT. YOU ARE NOT TO USE OR DISCLOSE TO OTHERS THE SUBJECT MATTER CONTAINED HEREIN FOR ANY USES BUT THE INTENDED PURPOSES.

ISSUE

FOR REVIEW 01.07.2020
FOR REVIEW 03.16.2020
FOR REVIEW 04.10.2020
FOR CONSTRUCTION 04.29.2020

REVISIONS

MP2 JOB #: 1916215WI
CLIENT JOB #:
DRAWN BY: JSA
CHECKED BY: AJ

SHEET CONTENTS

FARROWING BARN WALL EXPANSION JOINT PLAN

SHEET NUMBER

S1.8

PLAN NOTES

1. SEE SHEET S0.1 FOR ADDITIONAL NOTES.
2. CURING: ALL CONCRETE FLAT WORK SHALL BE COVERED IMMEDIATELY AND MAINTAINED CONTINUOUSLY WET FOR A MINIMUM OF 7 DAYS AFTER PLACING. CURING SHEETS SHALL BE USED, AND ARE TO REMAIN IN PLACE, DURING THIS PERIOD. CURING COMPOUND MAY BE USED AND MUST BE APPLIED PER MANUFACTURER'S RECOMMENDATIONS.
3. PROVIDE "FLAT TEE" OR "+" WATERSTOP AS SPECIFIED AT SLAB TO WALL JOINT LOCATIONS. WELD AND INSPECT ALL WATERSTOP JOINTS.
4. SEE NOTES SHEET S0.1 FOR WATERSTOP REQUIREMENTS.
5. PER WISCONSIN CONCRETE SPECIFICATION #4, SECTION 6, FORMS INCLUDING THIS KEYWAY FORM MUST REMAIN IN PLACE FOR A MINIMUM OF 24 HOURS AFTER CONCRETE PLACEMENT.
6. LAP HORIZONTAL SLAB AND WALL REINFORCEMENT PER GENERAL NOTES TABLE TYPICAL EXCEPT AT CONTROL AND EXPANSION JOINTS.
7. SEE SHEET S6.1 FOR TYPICAL DETAILS NOT CALLED OUT ON PLAN.
8. SOME FINE LINE RANDOM SHRINKAGE CRACKING MAY DEVELOP HOWEVER PER NRCS 313, ACI 360 & PCA 2008 WITH THE USE OF STEEL AS SHOWN THESE CRACKS ARE EXPECTED TO PERFORM AT A WATERTIGHT LEVEL. LARGER WALL AND FLOOR CRACKS DUE TO IMPROPER CURING METHODS, WEATHER PROTECTION, MIX DESIGN, SUBSTITUTION, DELETION OR MISPLACEMENT OF REINFORCEMENT, IMPROPER MIX DESIGN, OR NATRUAL SHRINKAGE OF CONCRETE SHALL BE REMEDIED AT THE EXPENSE OF THE CONTRACTOR TO THE SATIFACTION OF THE SUPERVISING ENGINEER AND AGENCY.
9. THE CONTRACTOR SHALL INSPECT FOR SHRINKAGE CRACKS GREATER THAN 1/16" AFTER A 28 DAY CURE TIME AND FILL ALL SUCH CRACKS WITH A WATERPROOFING AGENT. CRACK FILLING SHALL BE INCLUDED IN THE CONTRACTORS FEE UNLESS SPECIFICALLY NEGOTIATED OTHERWISE WITH THE CLIENT.

FOUNDATION LEGEND

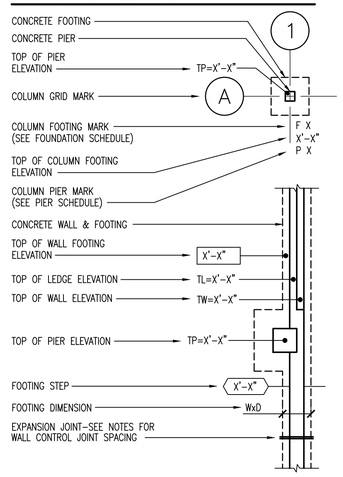

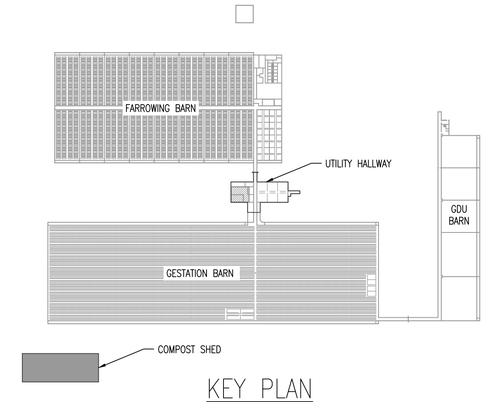

KEY PLAN

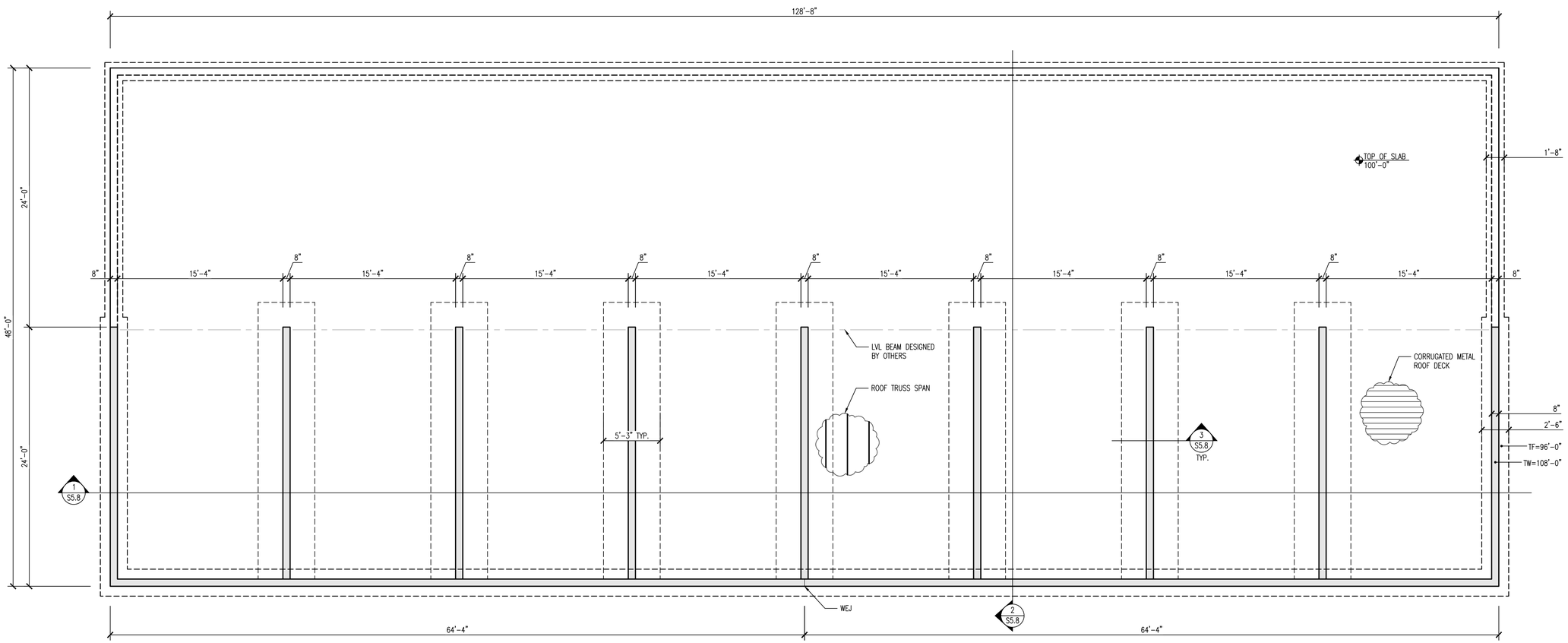

N

1 S1.9 COMPOST SHED FOUNDATION PLAN

SCALE: 3/16"=1'-0"

ROTH FARROWING FACILITY

HOG FACILITY
WAUZEKA, WI

-

(mp)2 STRUCTURAL ENGINEERS, LLC
583 D'Onofrio Drive, Suite 201
Madison, WI 53719
Office: 608-821-2770
Fax: 608-821-2780

THE INFORMATION CONTAINED HEREIN IS OF A PROPRIETARY NATURE AND IS SUBMITTED IN CONFIDENCE FOR USE IN THE CONSTRUCTION OF AN INSURED STRUCTURE. OWNERSHIP, LEASE OR PURCHASE OF THE STRUCTURE DESCRIBED HEREIN CONFERS NO RIGHTS TO THE DESIGN, NOR DOES IT CONFER ANY RIGHTS TO USE THIS DESIGN FOR ANY OTHER PROJECT, PURPOSE, LOCATION, REGARDLESS WHETHER OR NOT THE PROJECT IS SIMILAR IN NATURE TO THE INTENDED PROJECT. THIS DESIGN MAY NOT BE REPRODUCED WITHOUT WRITTEN CONSENT OF MP2 STRUCTURAL ENGINEERS, LLC.
THE INFORMATION CONTAINED HEREIN IS PROPRIETARY AND THE RIGHT TO USE OR DISCLOSE TO OTHERS THE SUBJECT MATTER CONTAINED HEREIN FOR ANY USES BUT INTENDED PURPOSES.

ISSUE

	FOR REVIEW 01.07.2020
	FOR REVIEW 03.16.2020
	FOR REVIEW 04.10.2020
	FOR CONSTRUCTION 04.29.2020

REVISIONS

MP2 JOB #: 1916215WI
CLIENT JOB #:
DRAWN BY: JSA
CHECKED BY: AJ

SHEET CONTENTS

COMPOST SHED FOUNDATION PLAN

SHEET NUMBER

S1.9

PLAN NOTES

1. SEE SHEET S0.1 FOR ADDITIONAL NOTES.
2. CURING: ALL CONCRETE FLAT WORK SHALL BE COVERED IMMEDIATELY AND MAINTAINED CONTINUOUSLY WET FOR A MINIMUM OF 7 DAYS AFTER PLACING. CURING SHEETS SHALL BE USED, AND ARE TO REMAIN IN PLACE, DURING THIS PERIOD. CURING COMPOUND MAY BE USED AND MUST BE APPLIED PER MANUFACTURER'S RECOMMENDATIONS.
3. PROVIDE "FLAT TEE" OR "+" WATERSTOP AS SPECIFIED AT SLAB TO WALL JOINT LOCATIONS. WELD AND INSPECT ALL WATERSTOP JOINTS.
4. SEE NOTES SHEET S0.1 FOR WATERSTOP REQUIREMENTS.
5. PER WISCONSIN CONCRETE SPECIFICATION #4, SECTION 6, FORMS INCLUDING THIS KEYWAY FORM MUST REMAIN IN PLACE FOR A MINIMUM OF 24 HOURS AFTER CONCRETE PLACEMENT.
6. LAP HORIZONTAL SLAB AND WALL REINFORCEMENT PER GENERAL NOTES TABLE TYPICAL EXCEPT AT CONTROL AND EXPANSION JOINTS.
7. SEE SHEET S6.1 FOR TYPICAL DETAILS NOT CALLED OUT ON PLAN.
8. SOME FINE LINE RANDOM SHRINKAGE CRACKING MAY DEVELOP HOWEVER PER NRCS 313, ACI 360 & PCA 2008 WITH THE USE OF STEEL AS SHOWN THESE CRACKS ARE EXPECTED TO PERFORM AT A WATERTIGHT LEVEL. LARGER WALL AND FLOOR CRACKS DUE TO IMPROPER CURING METHODS, WEATHER PROTECTION, MIX DESIGN, SUBSTITUTION, DELETION OR MISPLACEMENT OF REINFORCEMENT, IMPROPER MIX DESIGN, OR NATRUAL SHRINKAGE OF CONCRETE SHALL BE REMEDIED AT THE EXPENSE OF THE CONTRACTOR TO THE SATIFACTION OF THE SUPERVISING ENGINEER AND AGENCY.
9. THE CONTRACTOR SHALL INSPECT FOR SHRINKAGE CRACKS GREATER THAN 1/16" AFTER A 28 DAY CURE TIME AND FILL ALL SUCH CRACKS WITH A WATERPROOFING AGENT. CRACK FILLING SHALL BE INCLUDED IN THE CONTRACTORS FEE UNLESS SPECIFICALLY NEGOTIATED OTHERWISE WITH THE CLIENT.
10. OWNER TO CONFIRM/VERIFY ALL TOP OF SLAB AND TOP OF WALL ELEVATIONS AS WELL AS WALK DOOR OPENING LOCATIONS.
11. GRADE ASSUMED TO BE LEVEL WITH TOP OF SLAB ELEVATIONS. STEM WALLS ARE NOT DESIGNED AS RETAINING WALLS. PLEASE NOTIFY ENGINEER IF THESE CONDITIONS CHANGE.

FOUNDATION LEGEND

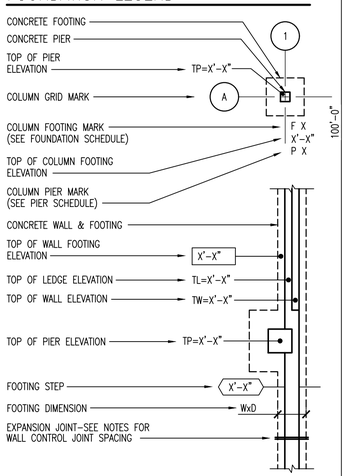

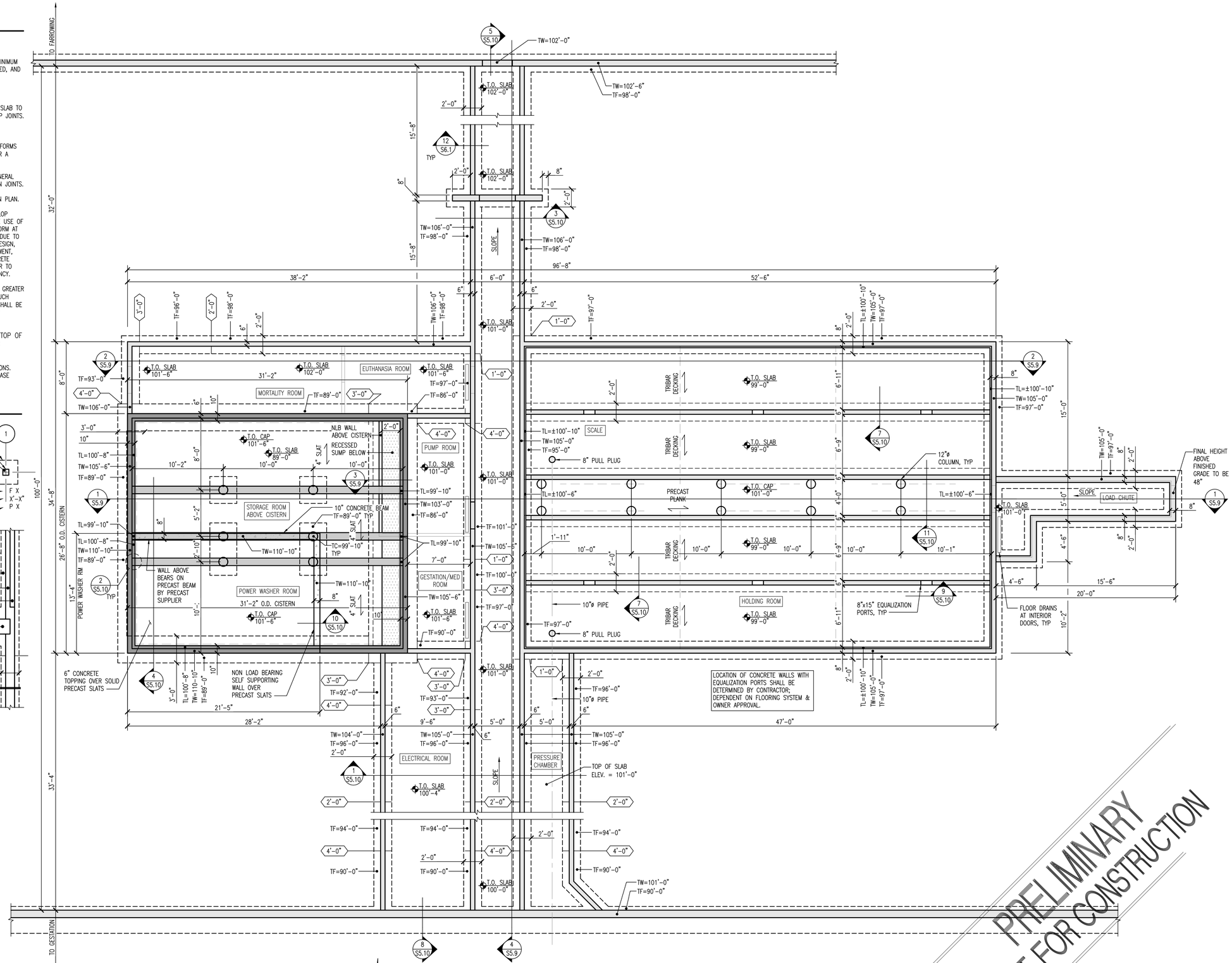

N

1 S1.10 UTILITY HALLWAY FOUNDATION PLAN

SCALE: 3/16"=1'-0"

PRELIMINARY
NOT FOR CONSTRUCTION

ROTH FARROWING FACILITY
HOG FACILITY
WAUZEKA, WI
-

(mp)² STRUCTURAL ENGINEERS, LLC
583 D'Onofrio Drive, Suite 201
Madison, WI 53719
Office: 608-821-0793
Fax: 608-821-0793

THE INFORMATION CONTAINED HEREIN IS OF A PROPRIETARY NATURE AND IS SUBMITTED IN CONFIDENCE FOR USE ONLY WITHIN THE CLIENT'S ORGANIZATION. REPRODUCTION, DISTRIBUTION, OR USE OUTSIDE THE CLIENT'S ORGANIZATION WITHOUT WRITTEN PERMISSION OF MP SQUARED STRUCTURAL ENGINEERS, LLC IS FORBIDDEN. ALL RIGHTS, INCLUDING COPYRIGHT, ARE RESERVED BY MP SQUARED STRUCTURAL ENGINEERS, LLC. THE INFORMATION CONTAINED HEREIN IS OF A PROPRIETARY NATURE AND IS SUBMITTED IN CONFIDENCE. REPRODUCTION, DISTRIBUTION, OR USE OUTSIDE THE CLIENT'S ORGANIZATION WITHOUT WRITTEN PERMISSION OF MP SQUARED STRUCTURAL ENGINEERS, LLC IS FORBIDDEN. ALL RIGHTS, INCLUDING COPYRIGHT, ARE RESERVED BY MP SQUARED STRUCTURAL ENGINEERS, LLC. DISCLOSE TO OTHERS THE SUBJECT MATTER CONTAINED HEREIN OR ANY USES BUT INTENDED PURPOSES.

ISSUE

	FOR REVIEW 01.07.2020
	FOR REVIEW 03.16.2020
	FOR REVIEW 04.10.2020
	FOR CONSTRUCTION 04.29.2020

REVISIONS

MP2 JOB #: 1916215WI
CLIENT JOB #:
DRAWN BY: JSA
CHECKED BY: AJ

SHEET CONTENTS

UTILITY HALLWAY FOUNDATION PLAN

SHEET NUMBER

S1.10

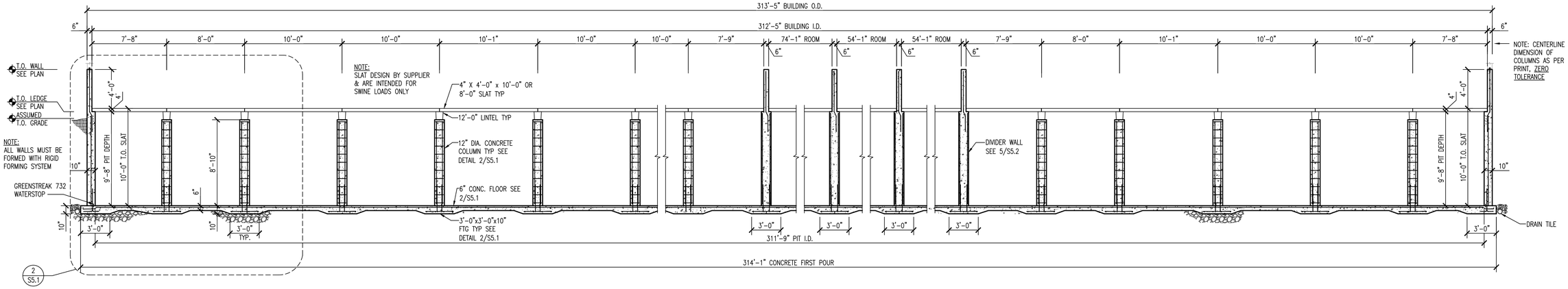

1 S5.1 GDU CONCRETE CROSS SECTION

SCALE: 3/16" = 1'-0"

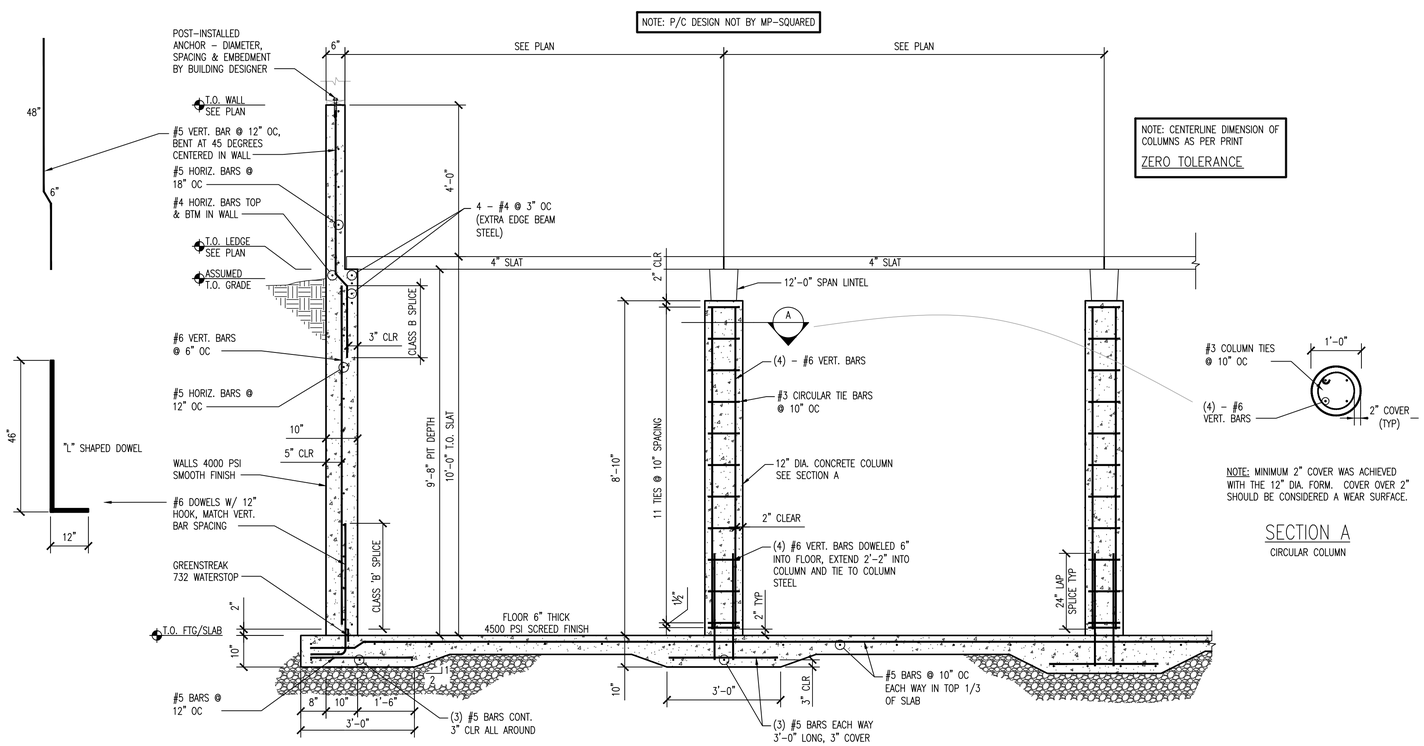

2 S5.1 PARTIAL SECTION

SCALE: 1/2" = 1'-0"

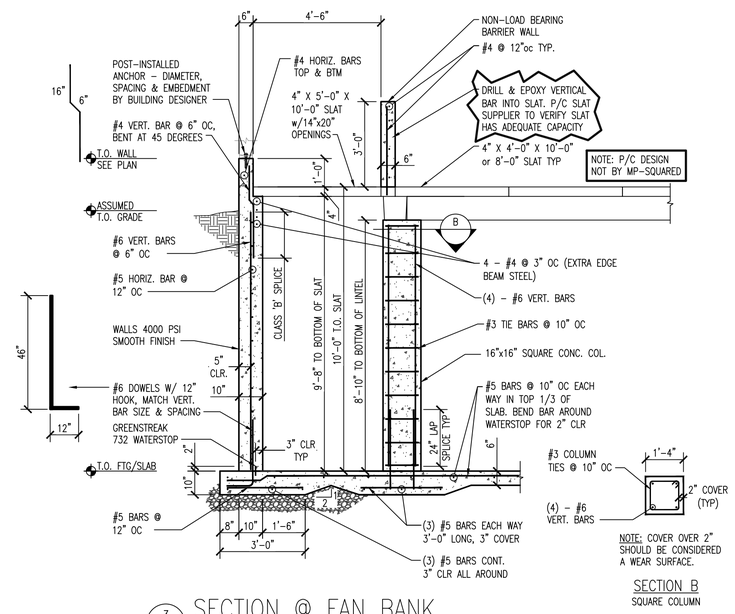

3 S5.1 SECTION @ FAN BANK

SCALE: 3/8" = 1'-0"

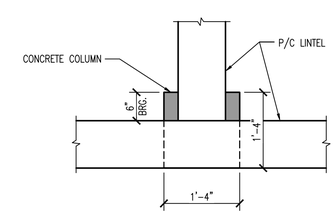

4 S5.1 COLUMN DETAIL

SCALE: 3/4"=1'-0"

ROTH FARROWING FACILITY

HOG FACILITY
WAUZEKA, WI
-

(mp)² STRUCTURAL ENGINEERS, LLC
583 D'Onofrio Drive, Suite 201
Madison, WI 53719
Office: 608-831-3773
Fax: 608-821-4760

THE INFORMATION CONTAINED HEREIN IS OF A PROPRIETARY NATURE AND IS SUBMITTED IN CONFIDENCE FOR USE ONLY BY THE CLIENT OF MP-SQUARED STRUCTURAL ENGINEERS, LLC. THIS INFORMATION MAY NOT BE DISCLOSED TO OTHERS WITHOUT THE WRITTEN CONSENT OF MP-SQUARED STRUCTURAL ENGINEERS, LLC. THIS INFORMATION MAY NOT BE USED FOR OTHER PURPOSES, INCLUDING, BUT NOT LIMITED TO, THE PROMOTION, SALE OR MANUFACTURE OF ANY PRODUCT OR PROCESS, WITHOUT THE PRIOR WRITTEN CONSENT OF MP-SQUARED STRUCTURAL ENGINEERS, LLC.
THE CLIENT AGREES TO HOLD MP-SQUARED STRUCTURAL ENGINEERS, LLC HARMLESS TO USE OR DISCLOSE TO OTHERS THE SUBJECT MATTER CONTAINED HEREIN FOR ANY USES BUT INTENDED PURPOSES.

ISSUE

	FOR REVIEW 01.07.2020
	FOR REVIEW 03.16.2020
	FOR REVIEW 04.10.2020
	FOR CONSTRUCTION 04.29.2020

REVISIONS

MP2 JOB #: 1916215WI
CLIENT JOB #:
DRAWN BY: JSA
CHECKED BY: AJ

SHEET CONTENTS

GDU BARN DETAILS

SHEET NUMBER

S5.1

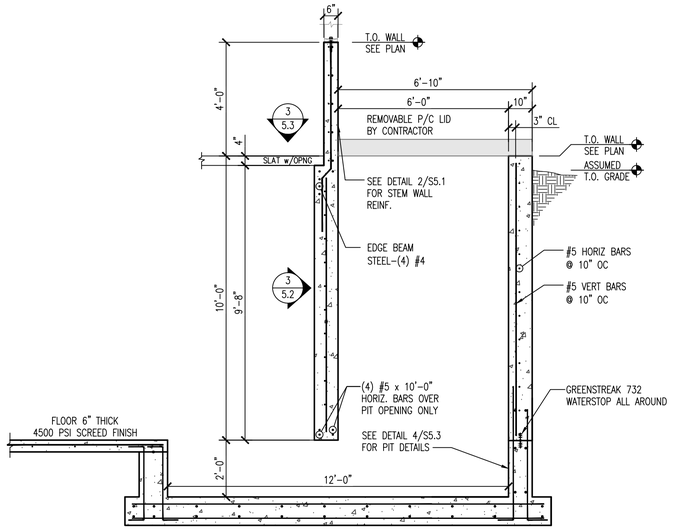

1 S5.2 CONCRETE CROSS SECTION @ PIT ACCESS

SCALE: 3/8" = 1'-0"

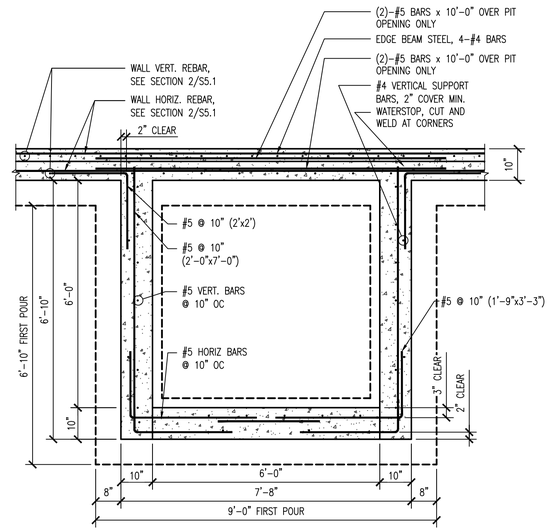

2 S5.2 PLAN VIEW @ PIT ACCESS

SCALE: 1/2" = 1'-0"

NOTE: THE BEAM AND GANG SLAT SUPPLIER SHOULD CONFIRM THAT THE BEAMS AND SLATS MEET REQUIREMENTS AS STATED IN NRCS-WI 313, WASTE STORAGE FACILITY, V(B)(2c)(2). TANK COVERS SHALL BE DESIGNED TO WITHSTAND BOTH DEAD AND LIVE LOADS. THE LIVE LOAD VALUES FOR COVERS CONTAINED IN ASAE EP378.3 TABLE 1, FLOOR AND SUSPENDED LOADS ON AGRICULTURAL STRUCTURE DUE TO USE (500 LB SWINE).

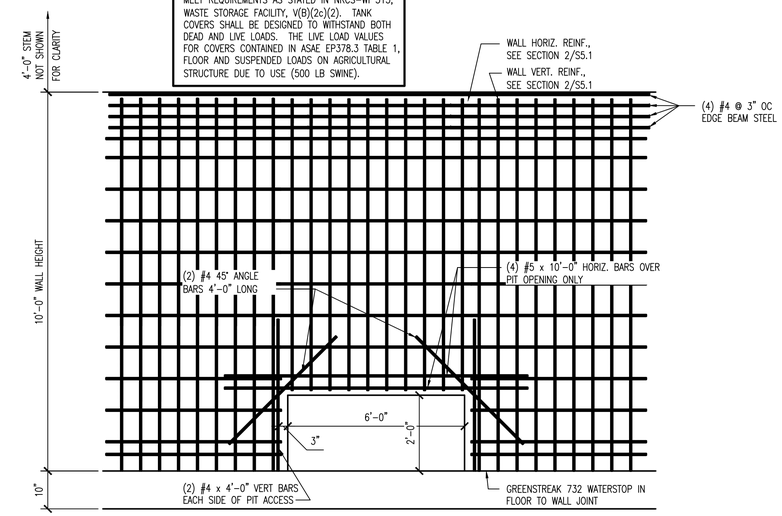

3 S5.2 PIT ACCESS ELEVATION – REINF. PLACEMENT

SCALE: 1/2" = 1'-0"

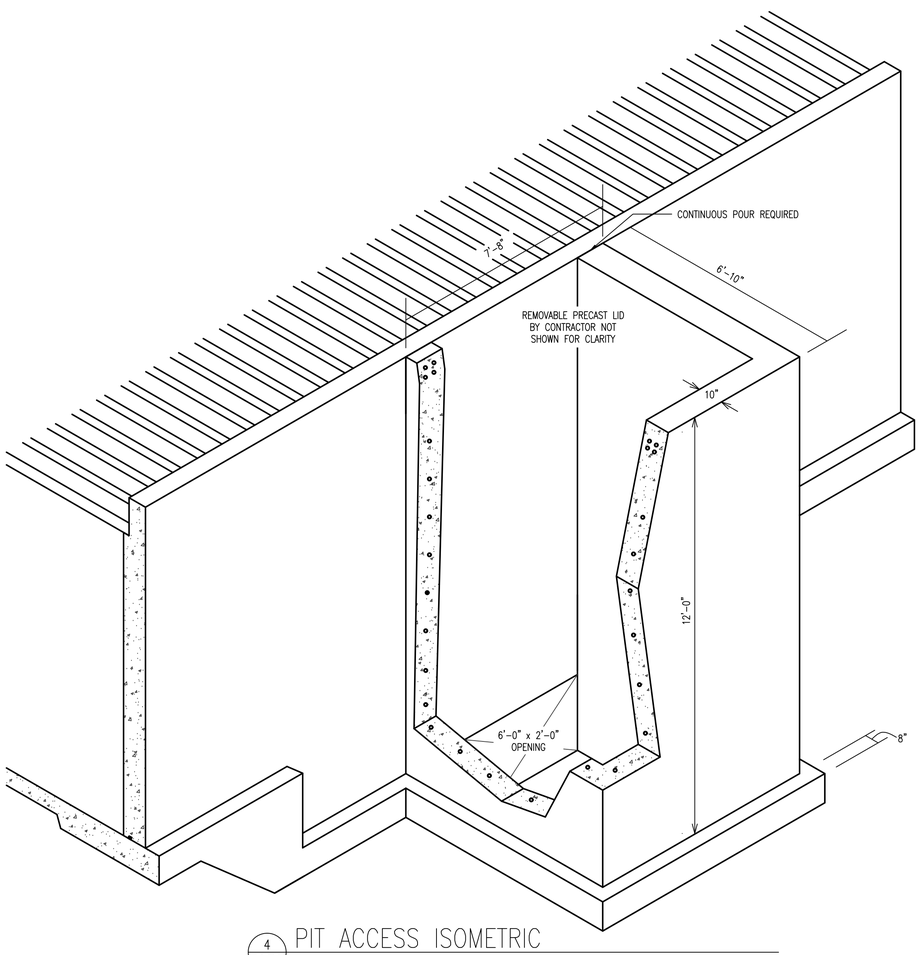

4 S5.2 PIT ACCESS ISOMETRIC

SCALE: NTS

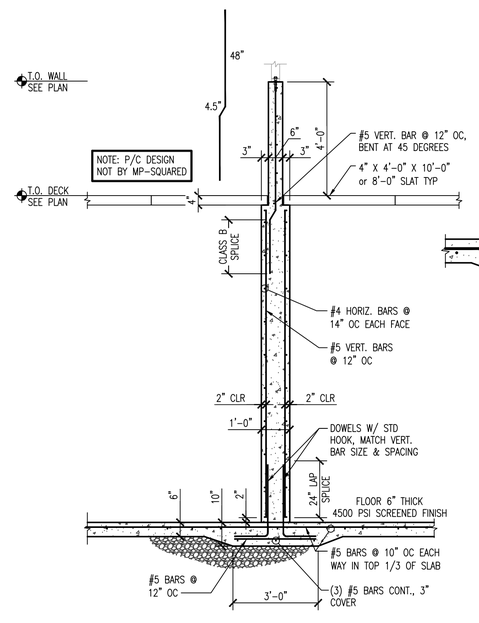

5 S5.2 GDU DIVIDER WALL SECTION

SCALE: 3/8"=1'-0"

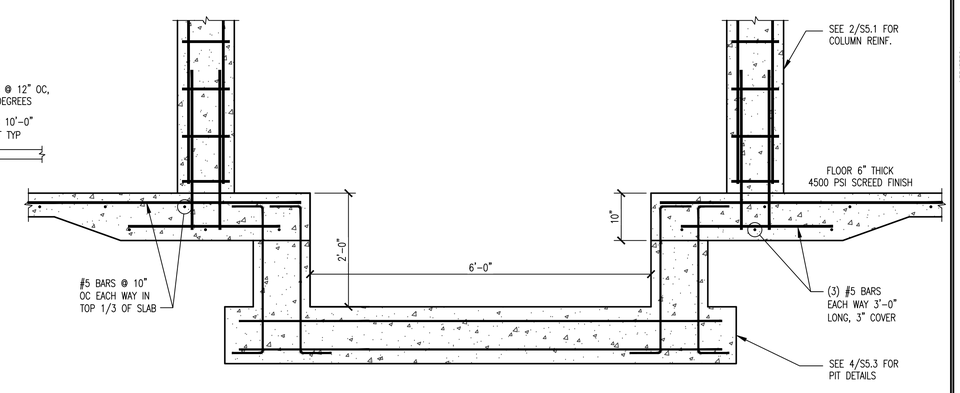

6 S5.2 GDU SUMP PIT DETAIL

SCALE: 3/4"=1'-0"

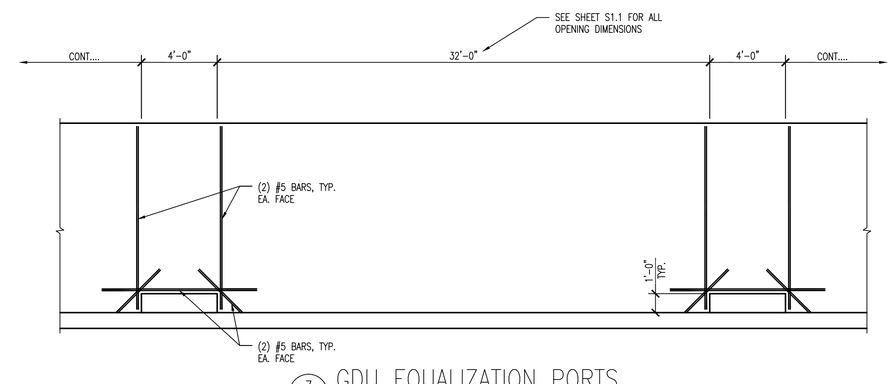

7 S5.2 GDU EQUALIZATION PORTS

SCALE: NTS

ROTH FARROWING FACILITY

HOG FACILITY
WAUZEKA, WI
-

(mp)² STRUCTURAL ENGINEERS, LLC
583 D'Onofrio Drive, Suite 201
Madison, WI 53719
Office: 608-821-2770
Fax: 608-821-2780

THE INFORMATION CONTAINED HEREIN IS OF A PROPRIETARY NATURE AND IS SUBMITTED IN CONFIDENCE FOR USE ONLY WITH THE CLIENT OF MP-SQUARED STRUCTURAL ENGINEERS, LLC AND FOR USE ONLY FOR THE PROJECT REFERENCED HEREIN. ANY OTHER USE OR DISTRIBUTION OF THIS DOCUMENT OR ANY PARTS THEREOF, INCLUDING, BUT NOT LIMITED TO, REPRODUCTION, DISTRIBUTION, DISCLOSURE OR ANY OTHER USE OR DISTRIBUTION OF THIS DOCUMENT WITHOUT WRITTEN CONSENT OF MP-SQUARED STRUCTURAL ENGINEERS, LLC IS PROHIBITED. THE RECEIVING PARTY AGREES TO HOLD THE SAME IN STRICT CONFIDENCE AND DISCLOSE TO OTHERS THE SUBJECT MATTER CONTAINED HEREIN FOR ANY USES BUT AUTHORIZED PURPOSES.

ISSUE

	FOR REVIEW 01.07.2020
	FOR REVIEW 03.16.2020
	FOR REVIEW 04.10.2020
	FOR CONSTRUCTION 04.29.2020

REVISIONS

MP2 JOB #: 1916215WI
CLIENT JOB #:
DRAWN BY: JSA
CHECKED BY: AJ

SHEET CONTENTS

GDU BARN DETAILS

SHEET NUMBER

S5.2

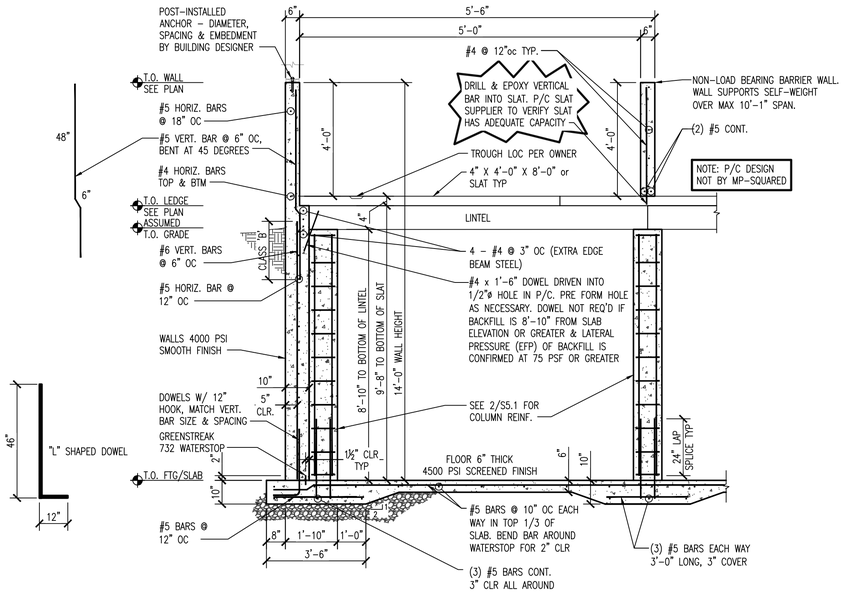

1 S5.3 SECTION @ GDU HALLWAY

SCALE: 3/8" = 1'-0"

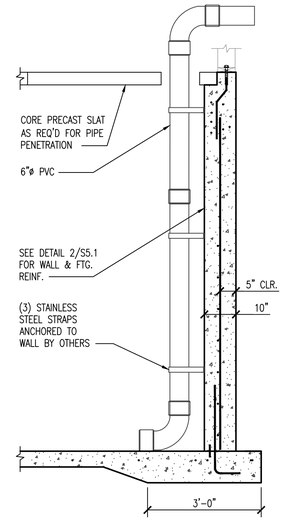

2 S5.3 RECIRCULATION PIPE DETAIL

SCALE: 1/2"=1'-0"

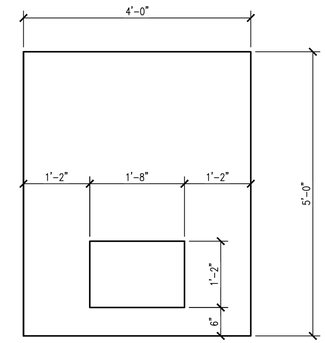

3 S5.3 OPENING IN SLATS

SCALE: 3/4"=1'-0"

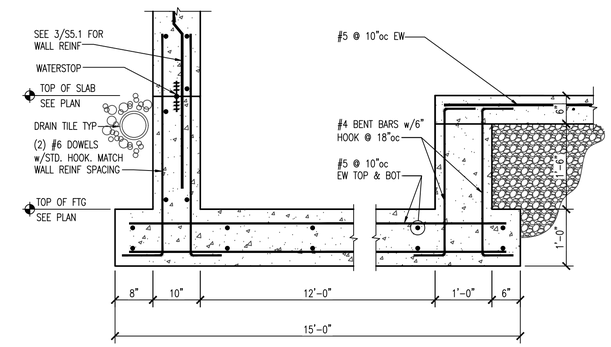

4 S5.3 SUMP DETAIL

SCALE: 3/4"=1'-0"

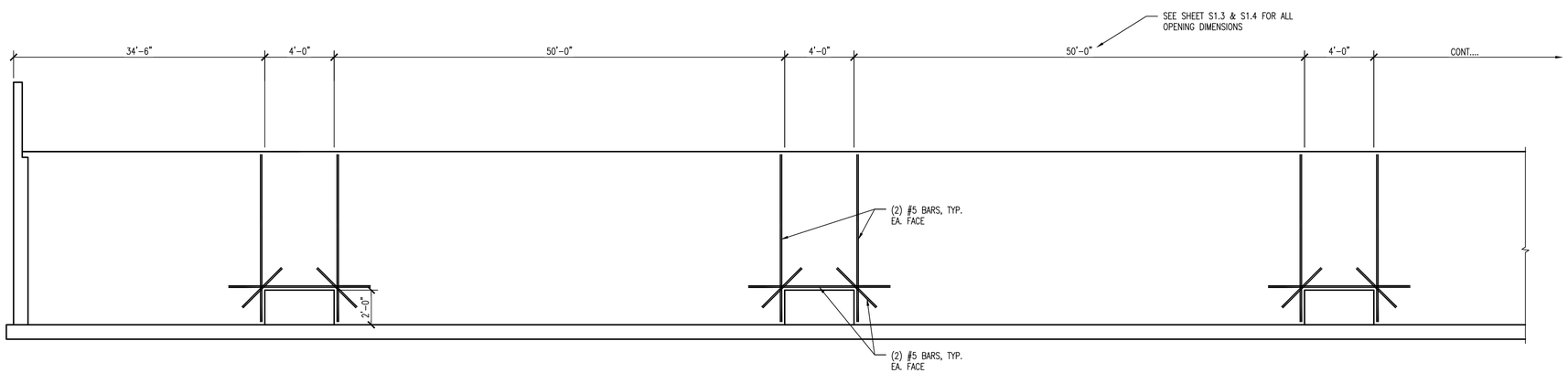

5 S5.3 GESTATION EQUALIZATION PORTS

SCALE: NTS

ROTH FARROWING FACILITY

HOG FACILITY
WAUZEKA, WI
-

(mp)² STRUCTURAL ENGINEERS, LLC
583 D'Onofrio Drive, Suite 201
Madison, WI 53719
Office: 608-833-7373
Fax: 608-821-4780

THE INFORMATION CONTAINED HEREIN IS OF A PROPRIETARY NATURE AND IS SUBMITTED IN CONFIDENCE FOR USE ONLY BY THE CLIENT OF MP SQUARED STRUCTURAL ENGINEERS, LLC. NO COPYRIGHT OR USE OF INFORMATION CONTAINED HEREIN SHALL BE GRANTED TO ANYONE OTHER THAN THE CLIENT FOR ANY PURPOSE WHATSOEVER. NEITHER THIS DOCUMENT NOR ANY PART THEREOF MAY BE REPRODUCED, STORED IN A RETRIEVAL SYSTEM, OR TRANSMITTED IN ANY FORM OR BY ANY MEANS WITHOUT WRITTEN CONSENT OF MP SQUARED STRUCTURAL ENGINEERS, LLC. THE CLIENT SHALL HOLD MP SQUARED STRUCTURAL ENGINEERS, LLC HARMLESS TO USE OR DISCLOSE TO OTHERS THE SUBJECT MATTER CONTAINED HEREIN FOR ANY USES BUT AUTHORIZED PURPOSES.

ISSUE

	FOR REVIEW 01.07.2020
	FOR REVIEW 03.16.2020
	FOR REVIEW 04.10.2020
	FOR CONSTRUCTION 04.29.2020

REVISIONS

MP2 JOB #: 1916215WI
CLIENT JOB #:
DRAWN BY: JSA
CHECKED BY: AJ

SHEET CONTENTS

GDU / GESTATION BARN DETAILS

SHEET NUMBER

S5.3

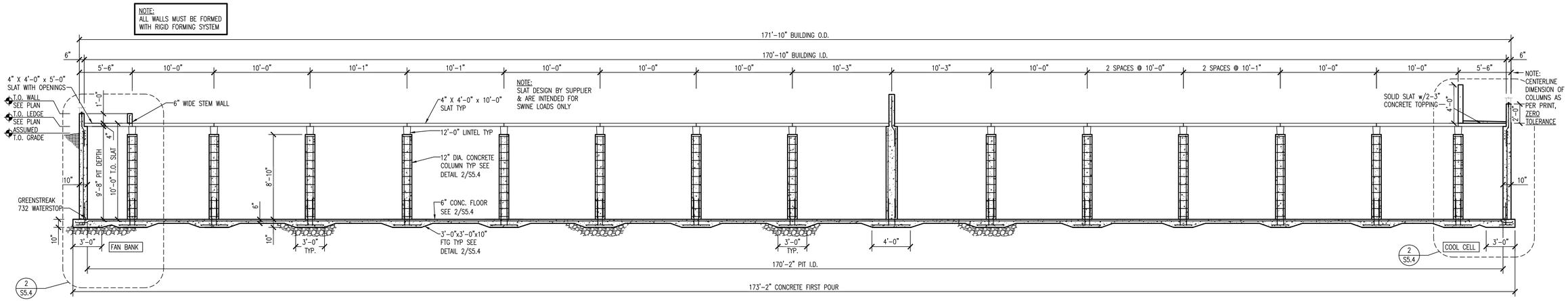

1 S5.4 CONCRETE CROSS SECTION GESTATION

SCALE: NTS.

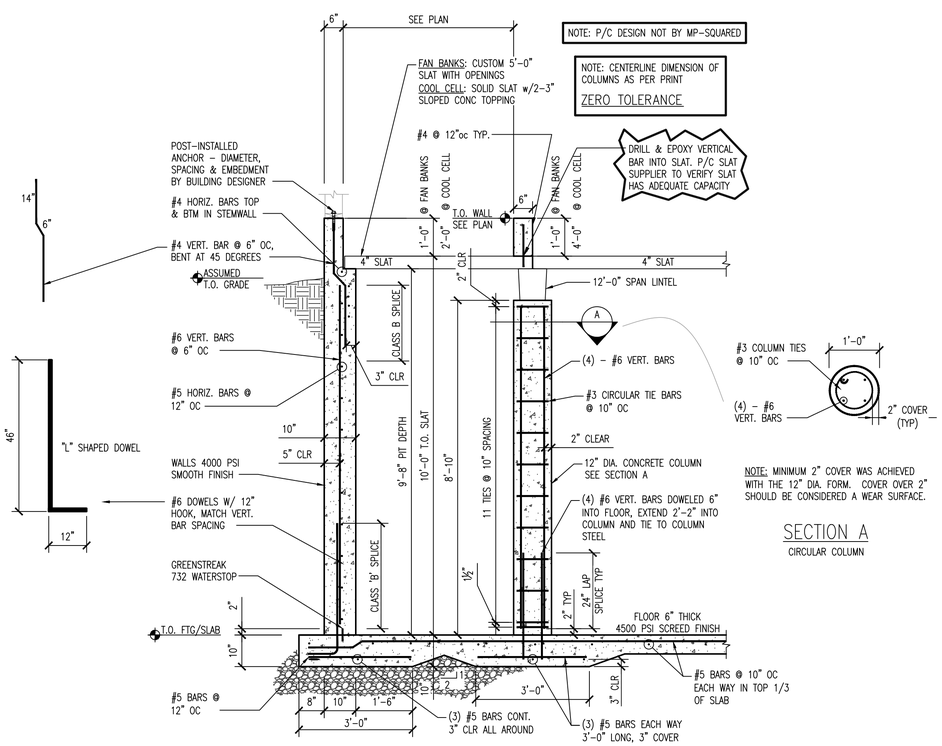

2 S5.4 PARTIAL SECTION AT FAN BANK

SCALE: 1/2" = 1'-0"

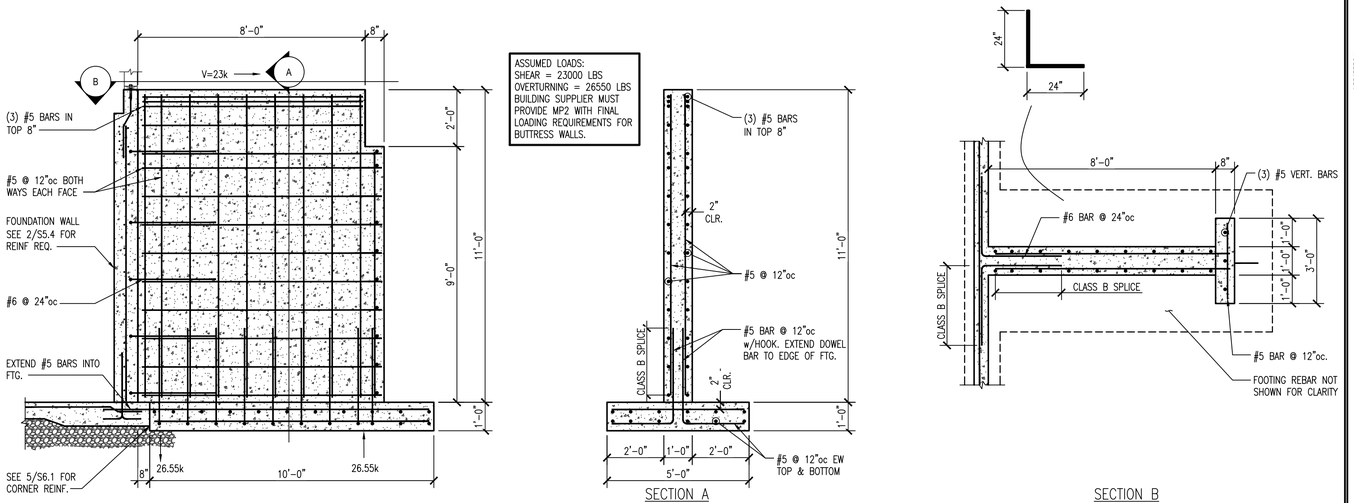

3 S5.4 BUTTRESS FOUNDATION WALL

SCALE: 3/8" = 1'-0"

ROTH FARROWING FACILITY

HOG FACILITY
WAUZEKA, WI
-

(mp)² STRUCTURAL ENGINEERS, LLC
583 D'Onofrio Drive, Suite 201
Madison, WI 53719
Office: 608-821-2770
Fax: 608-821-2780

THE INFORMATION CONTAINED HEREIN IS OF A PROPRIETARY NATURE AND IS SUBMITTED IN CONFIDENCE FOR USE IN THE CONSTRUCTION OF MP-SQUARED STRUCTURAL ENGINEERS, LLC, AND SHALL NOT BE DISCLOSED TO OTHERS OR REPRODUCED IN WHOLE OR IN PART WITHOUT WRITTEN CONSENT OF MP-SQUARED STRUCTURAL ENGINEERS, LLC, AND SHALL NOT BE USED FOR OTHER PURPOSES. ALL RIGHTS, INCLUDING ALL RIGHTS TO PATENTS, COPYRIGHTS, TRADE SECRETS, TRADEMARKS, AND OTHER INTELLECTUAL PROPERTY RIGHTS, ARE RESERVED. NO PART OF THIS PRODUCT MAY BE REPRODUCED OR TRANSMITTED IN ANY FORM OR BY ANY MEANS, ELECTRONIC, MECHANICAL, PHOTOCOPYING, RECORDING, OR OTHERWISE, WITHOUT WRITTEN CONSENT OF MP-SQUARED STRUCTURAL ENGINEERS, LLC.
THIS PRODUCT IS PROVIDED "AS IS" AND MP-SQUARED STRUCTURAL ENGINEERS, LLC, DISCLAIMS TO OTHERS THE SUBJECT MATTER CONTAINED HEREIN FOR ANY USES BUT INTENDED PURPOSES.

ISSUE

	FOR REVIEW 01.07.2020
	FOR REVIEW 03.16.2020
	FOR REVIEW 04.10.2020
	FOR CONSTRUCTION 04.29.2020

REVISIONS

MP2 JOB #: 1916215WI
CLIENT JOB #:
DRAWN BY: JSA
CHECKED BY: AJ

SHEET CONTENTS

GESTATION BARN DETAILS

SHEET NUMBER

S5.4

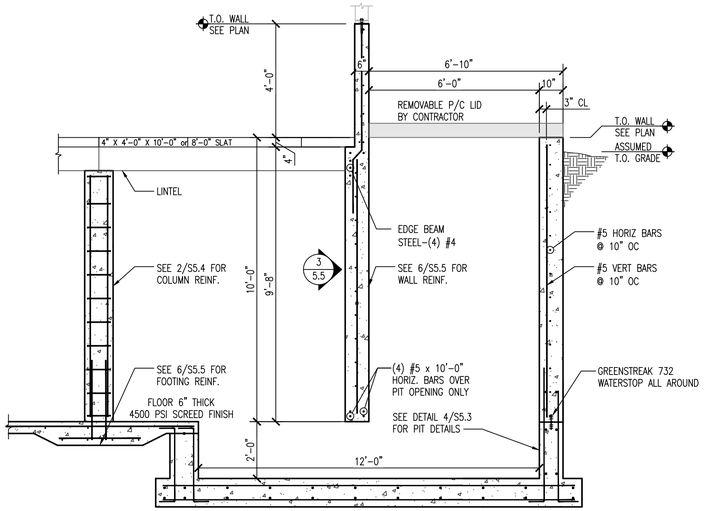

1 S5.5 CONCRETE CROSS SECTION @ PIT ACCESS

SCALE: 3/8" = 1'-0"

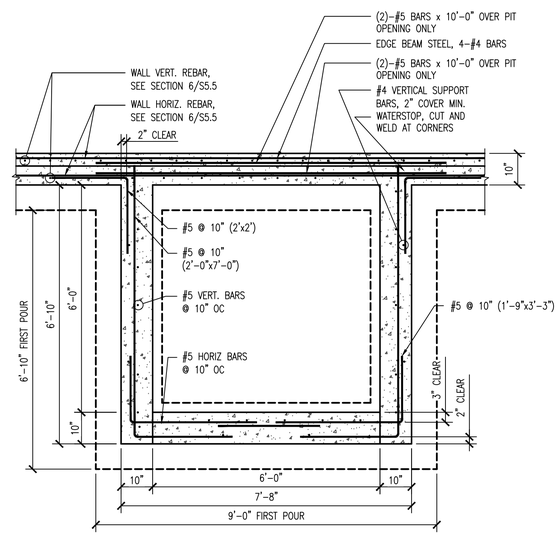

2 S5.5 PLAN VIEW @ PIT ACCESS

SCALE: 1/2" = 1'-0"

NOTE: THE BEAM AND GANG SLAT SUPPLIER SHOULD CONFIRM THAT THE BEAMS AND SLATS MEET REQUIREMENTS AS STATED IN NRCS-WI 313, WASTE STORAGE FACILITY, V(B)(2c)(2). TANK COVERS SHALL BE DESIGNED TO WITHSTAND BOTH DEAD AND LIVE LOADS. THE LIVE LOAD VALUES FOR COVERS CONTAINED IN ASAE EP378.3 TABLE 1, FLOOR AND SUSPENDED LOADS ON AGRICULTURAL STRUCTURE DUE TO USE (500 LB SWINE).

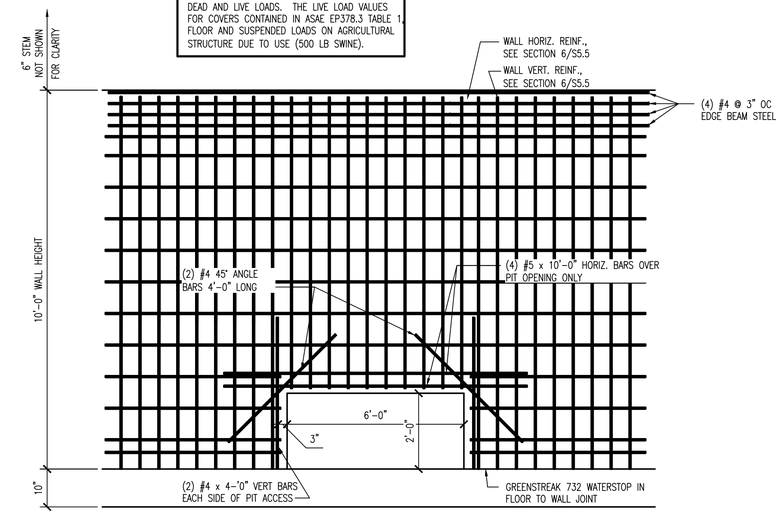

3 S5.5 PIT ACCESS ELEVATION – REINF. PLACEMENT

SCALE: 1/2" = 1'-0"

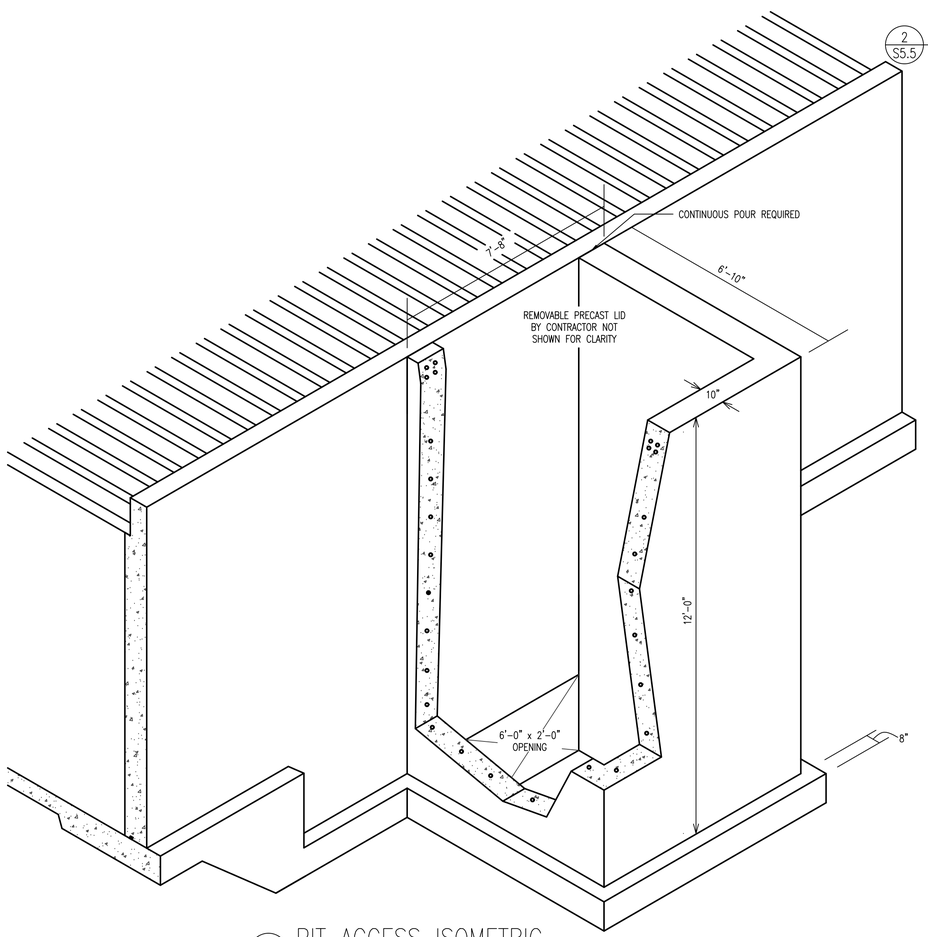

4 S5.5 PIT ACCESS ISOMETRIC

SCALE: NTS

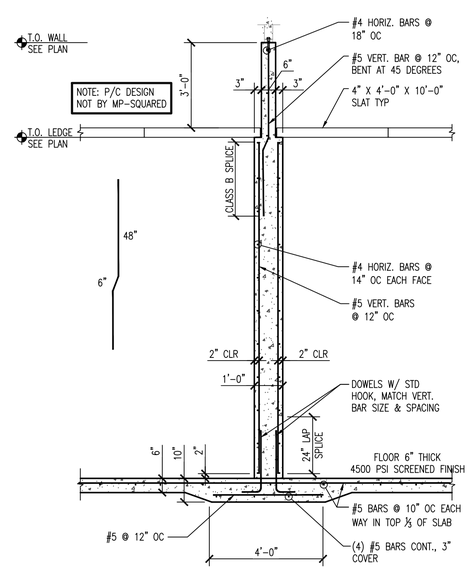

5 S5.5 SECTION AT INTERIOR FDN WALL IN GESTATION BARN

SCALE: 3/8"=1'-0"

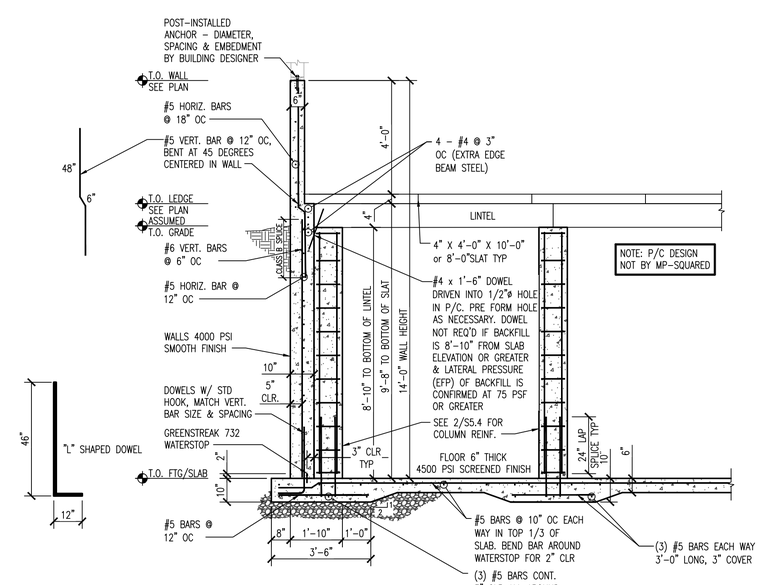

6 S5.5 SECTION @ GESTATION ENDWALL

SCALE: 3/8" = 1'-0"

ROTH FARROWING FACILITY

HOG FACILITY
WAUZEKA, WI
-

(mp)² STRUCTURAL ENGINEERS, LLC
583 D'Onofrio Drive, Suite 201
Madison, WI 53719
Office: 608-821-2770
Fax: 608-821-4780

THE INFORMATION CONTAINED HEREIN IS OF A PROPRIETARY NATURE AND IS SUBMITTED IN CONFIDENCE FOR USE IN THE CONSTRUCTION OF AN INSURED STRUCTURAL CONSTRUCTION. ALL OTHER USES OR USE BY THE OWNER AFTER THE COMPLETION OF THE STRUCTURAL CONSTRUCTION IS NOT ALLOWED FOR ANY OTHER PROJECT PURPOSE, LOCATION, ALTERATION, REPAIR, REPORTING OR PRODUCTION, WITHOUT WRITTEN CONSENT OF MP-SQUARED STRUCTURAL ENGINEERS, LLC. THE INFORMATION CONTAINED HEREIN MAY NOT BE REPRODUCED OR DISTRIBUTED TO OTHERS WITHOUT WRITTEN CONSENT OF MP-SQUARED STRUCTURAL ENGINEERS, LLC. THE INFORMATION CONTAINED HEREIN IS PROVIDED TO THE OWNER AND CLIENTS TO USE OR DISCLOSE TO OTHERS, THE SUBJECT MATTER CONTAINED HEREIN FOR ANY USES BUT AUTHORIZED PURPOSES.

ISSUE

	FOR REVIEW 01.07.2020
	FOR REVIEW 03.16.2020
	FOR REVIEW 04.10.2020
	FOR CONSTRUCTION 04.29.2020

REVISIONS

MP2 JOB #: 1916215WI
CLIENT JOB #:
DRAWN BY: JSA
CHECKED BY: AJ

SHEET CONTENTS

GESTATION BARN DETAILS

SHEET NUMBER

S5.5

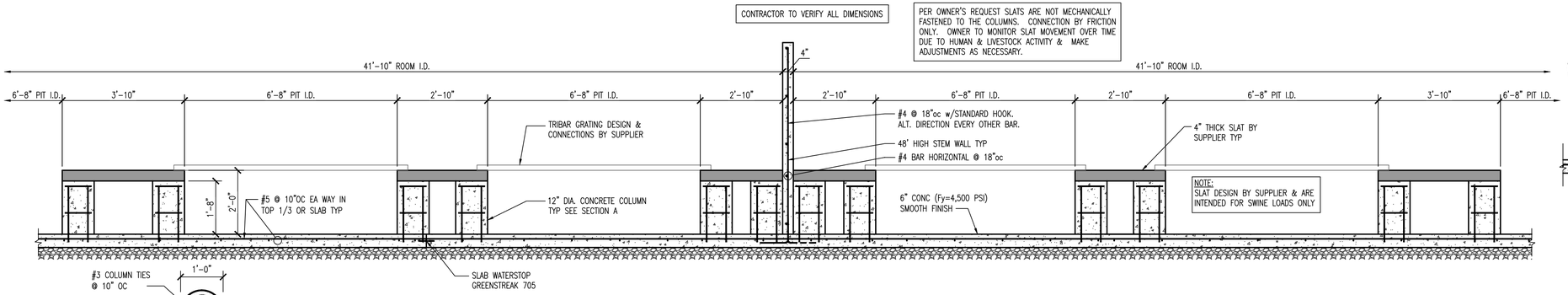

FARROWING BARN
CONCRETE CROSS SECTION
1 S5.6 SCALE: 1/2"=1'-0"

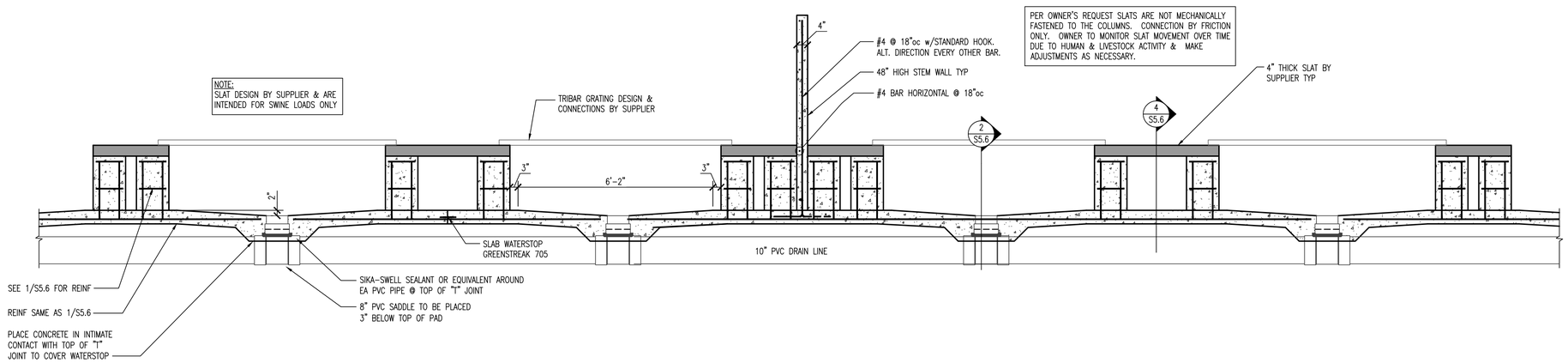

FARROWING BARN
CONCRETE CROSS SECTION
3 S5.6 SCALE: NTS

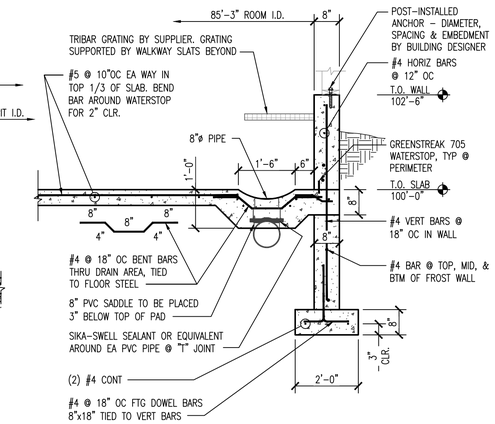

FARROWING BARN
NORTH/SOUTH SIDEWALL
2 S5.6 SCALE: 1/2"=1'-0"

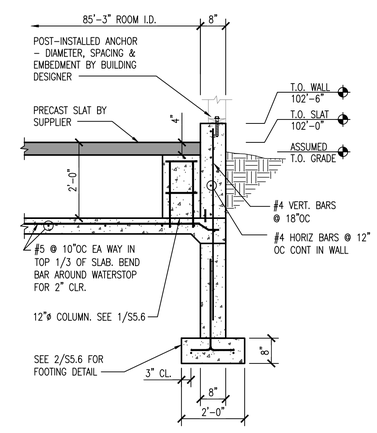

FARROWING BARN
NORTH/SOUTH SIDEWALL
4 S5.6 SCALE: 1/2"=1'-0"

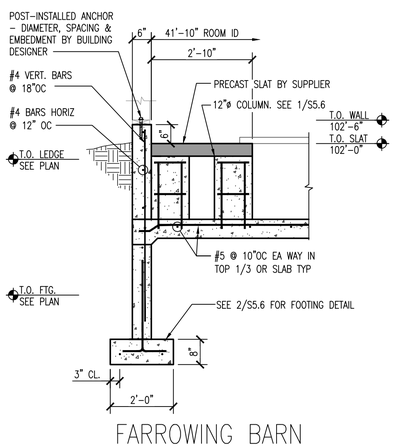

FARROWING BARN
WEST ENDWALL
5 S5.6 SCALE: 1/2"=1'-0"

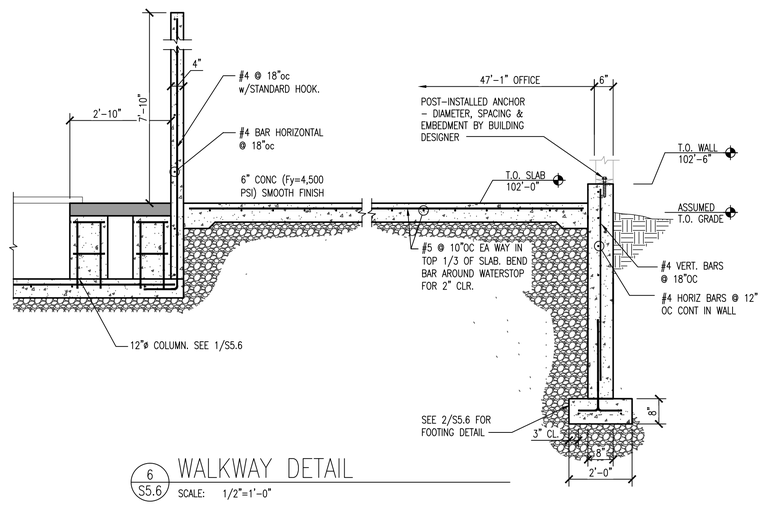

WALKWAY DETAIL
6 S5.6 SCALE: 1/2"=1'-0"

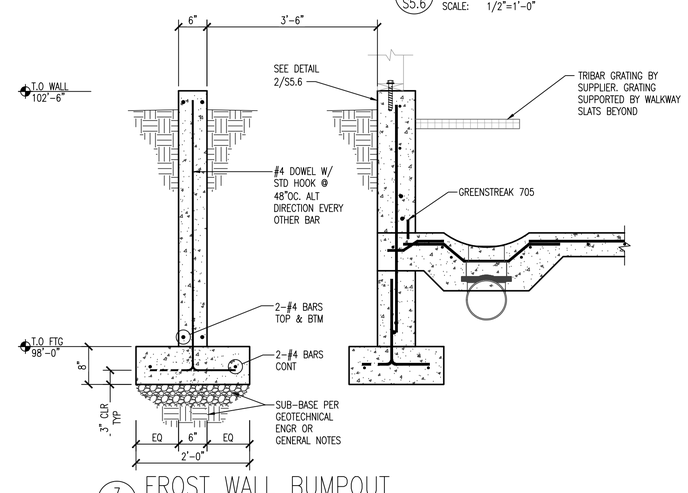

FROST WALL BUMPOUT
7 S5.6 SCALE: 3/4"=1'-0"

SECTION A
CIRCULAR COLUMN

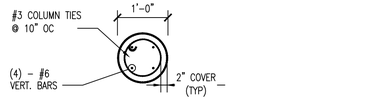

NOTE: MINIMUM 2" COVER WAS ACHIEVED WITH THE 12" DIA. FORM. COVER OVER 2" SHOULD BE CONSIDERED A WEAR SURFACE.

ROTH FARROWING FACILITY
HOG FACILITY
WAUZEKA, WI
-

(mp)² STRUCTURAL ENGINEERS, LLC
583 D'Onofrio Drive, Suite 201
Madison, WI 53719
Office: 608-831-4773
Fax: 608-821-4780

THE INFORMATION CONTAINED HEREIN IS OF A PROPRIETARY NATURE AND IS SUBMITTED IN CONFIDENCE FOR USE ON THIS PROJECT ONLY. ANY REPRODUCTION OR DISCLOSURE TO ANY OTHER PARTY OR FOR ANY OTHER PROJECT WITHOUT THE EXPRESS WRITTEN CONSENT OF (mp)² STRUCTURAL ENGINEERS, LLC IS PROHIBITED. ALL RIGHTS, INCLUDING COPYRIGHT, ARE RESERVED. NO RIGHTS TO USE OR DISCLOSE TO OTHERS THE SUBJECT MATTER CONTAINED HEREIN OR ANY USES BUT INTENDED PURPOSES.

ISSUE

	FOR REVIEW 01.07.2020
	FOR REVIEW 03.16.2020
	FOR REVIEW 04.10.2020
	FOR CONSTRUCTION 04.29.2020

REVISIONS

MP2 JOB #: 1916215WI
CLIENT JOB #:
DRAWN BY: JSA
CHECKED BY: AJ

SHEET CONTENTS
FARROWING BARN DETAILS

SHEET NUMBER
S5.6

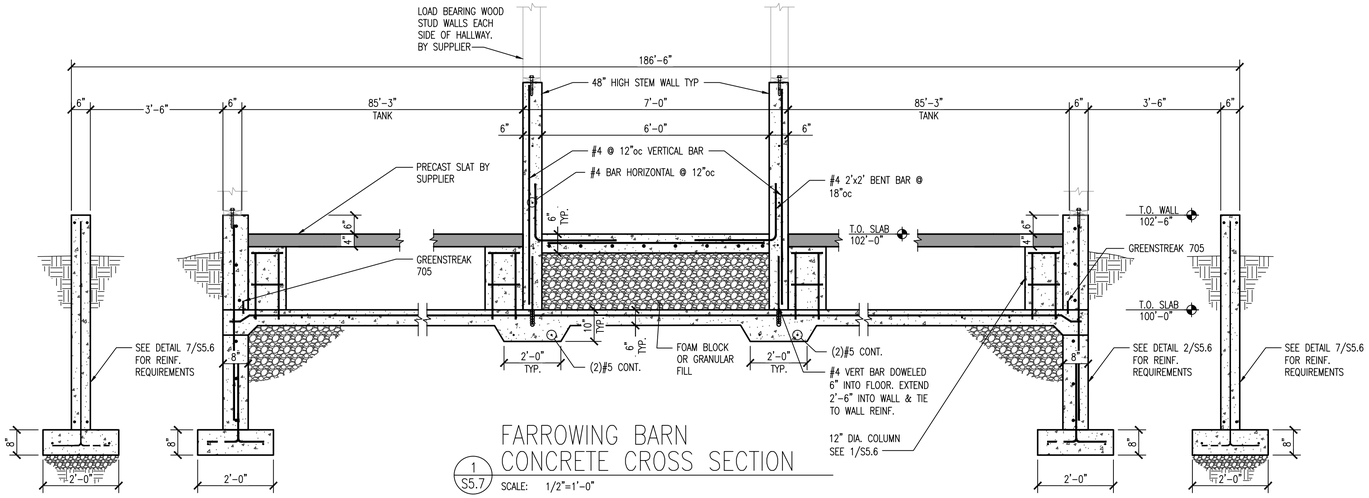

1 S5.7 FARROWING BARN CONCRETE CROSS SECTION

SCALE: 1/2"=1'-0"

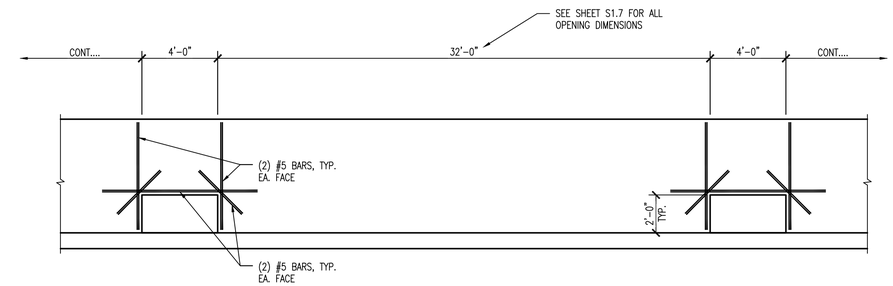

2 S5.7 EQUALIZATION PORTS AT NURSERY ROOM

SCALE: 1/4"=1'-0"

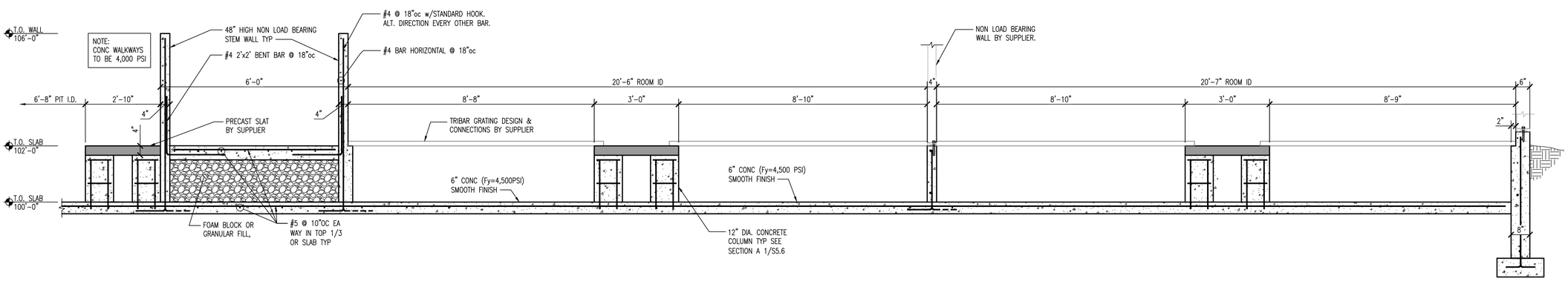

3 S5.7 SECTION AT NURSERY ROOM

SCALE: 1/2"=1'-0"

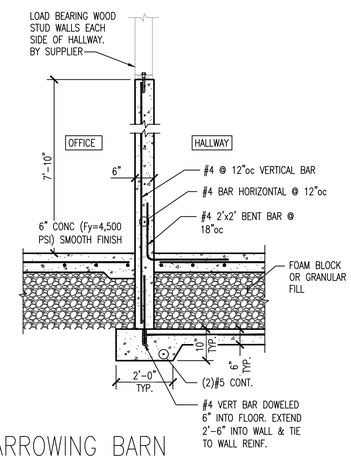

4 S5.7 FARROWING BARN CONCRETE CROSS SECTION

SCALE: 1/2"=1'-0"

ROTH FARROWING FACILITY

HOG FACILITY
WAUZEKA, WI
-

(mp)² STRUCTURAL ENGINEERS, LLC
583 D'Onofrio Drive, Suite 201
Madison, WI 53719
Office: 608-821-2770
Fax: 608-821-2780

THE INFORMATION CONTAINED HEREIN IS OF A PROPRIETARY NATURE AND IS SUBMITTED IN CONFIDENCE FOR USE ONLY BY THE CLIENT OF (mp)² STRUCTURAL ENGINEERS, LLC. THE CLIENT OWNERSHIP OF THE INFORMATION DOES NOT INCLUDE COPYRIGHT OWNERSHIP, WHICH IS THE PROPERTY OF (mp)² STRUCTURAL ENGINEERS, LLC. THE CLIENT IS PERMITTED TO USE THE INFORMATION FOR THE PURPOSE FOR WHICH IT WAS PROVIDED. REPRODUCTION, REPUBLICATION, REDISTRIBUTION OR RETRANSMISSION OF THE INFORMATION WITHOUT WRITTEN CONSENT OF (mp)² STRUCTURAL ENGINEERS, LLC, OR ANY USE OF THE INFORMATION FOR ANY PURPOSE OTHER THAN THE PURPOSE FOR WHICH IT WAS DISCLOSED TO OTHERS THE SUBJECT MATTER CONTAINED HEREIN OR ANY USES NOT INTENDED PURPOSES.

ISSUE

	FOR REVIEW 01.07.2020
	FOR REVIEW 03.16.2020
	FOR REVIEW 04.10.2020
	FOR CONSTRUCTION 04.29.2020

REVISIONS

MP2 JOB #: 1916215WI
CLIENT JOB #:
DRAWN BY: JSA
CHECKED BY: AJ

SHEET CONTENTS

FARROWING BARN & CONNECTOR BLDG. DETAILS

SHEET NUMBER

S5.7

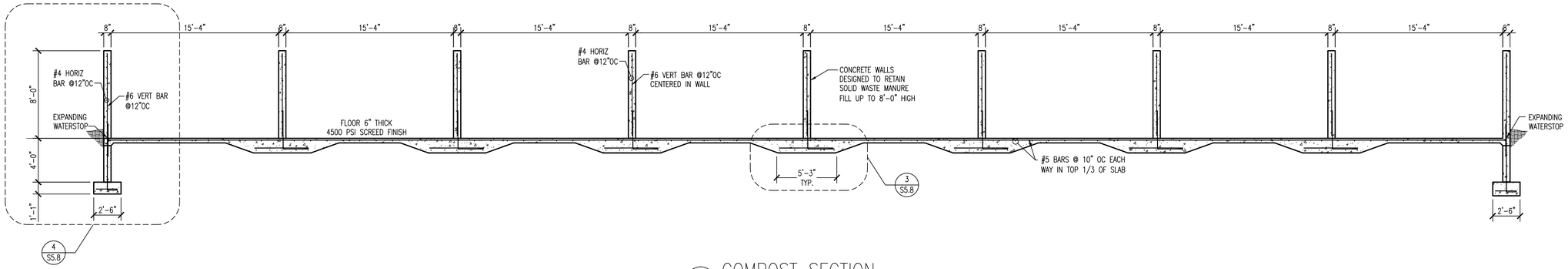

1 S5.8 COMPOST SECTION

SCALE: 3/16"=1'-0"

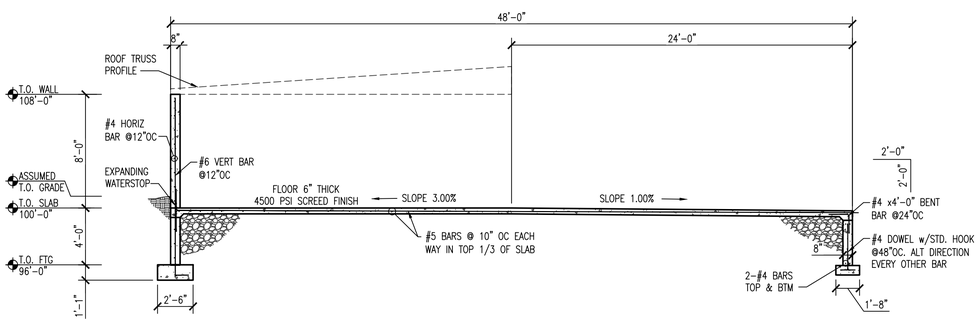

2 S5.8 COMPOST SECTION

SCALE: 3/16"=1'-0"

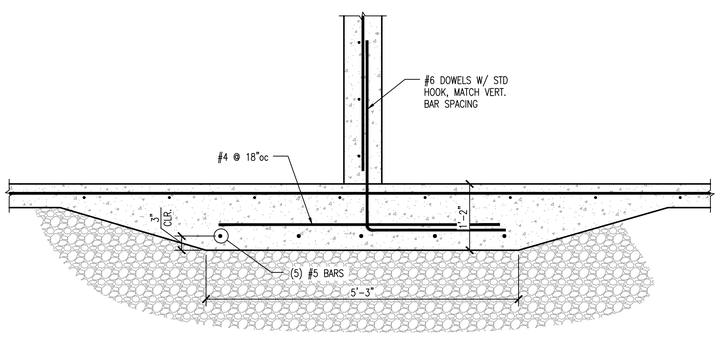

3 S5.8 FOOTING DETAIL

SCALE: 3/4"=1'-0"

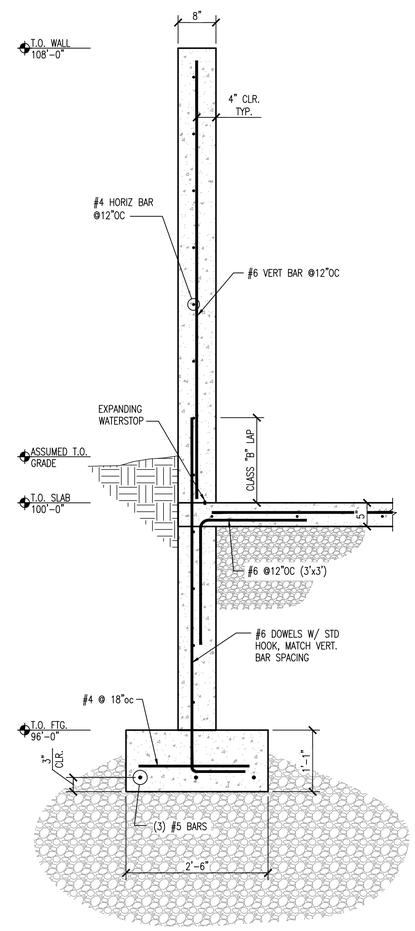

4 S5.8 COMPOST BLDG WALL DETAIL

SCALE: 3/4"=1'-0"

ROTH FARROWING FACILITY

HOG FACILITY
WAUZEKA, WI

-

(mp)2 STRUCTURAL ENGINEERS, LLC
583 D'Onofrio Drive, Suite 201
Madison, WI 53719
Office: 608-821-2770
Fax: 608-821-2780

THE INFORMATION CONTAINED HEREIN IS OF A PROPRIETARY NATURE AND IS SUBMITTED IN CONFIDENCE FOR USE ON THE CLIENT'S OF MP SQUARED STRUCTURAL ENGINEERS, LLC PROJECT. THE INFORMATION CONTAINED HEREIN IS NOT TO BE DISCLOSED OR REPRODUCED IN ANY FORM FOR ANY OTHER PROJECT PURPOSE, LOCATION, INCLUDING, WITHOUT LIMITATION, REPRODUCTION OR DISCLOSURE TO ANY OTHER ENGINEER OR ARCHITECT, WITHOUT THE PRIOR WRITTEN WRITTEN CONSENT OF MP SQUARED STRUCTURAL ENGINEERS, LLC. THE INFORMATION CONTAINED HEREIN IS NOT TO BE DISCLOSED OR REPRODUCED TO AND/OR DISCLOSED TO OTHERS. THE SUBJECT MATTER CONTAINED HEREIN FOR ANY USES BUT AUTHORIZED PURPOSES.

ISSUE

	FOR REVIEW 01.07.2020
	FOR REVIEW 03.16.2020
	FOR REVIEW 04.10.2020
	FOR CONSTRUCTION 04.29.2020

REVISIONS

MP2 JOB #: 1916215WI
CLIENT JOB #:
DRAWN BY: JSA
CHECKED BY: AJ

SHEET CONTENTS

COMPOST BUILDING DETAILS

SHEET NUMBER

S5.8

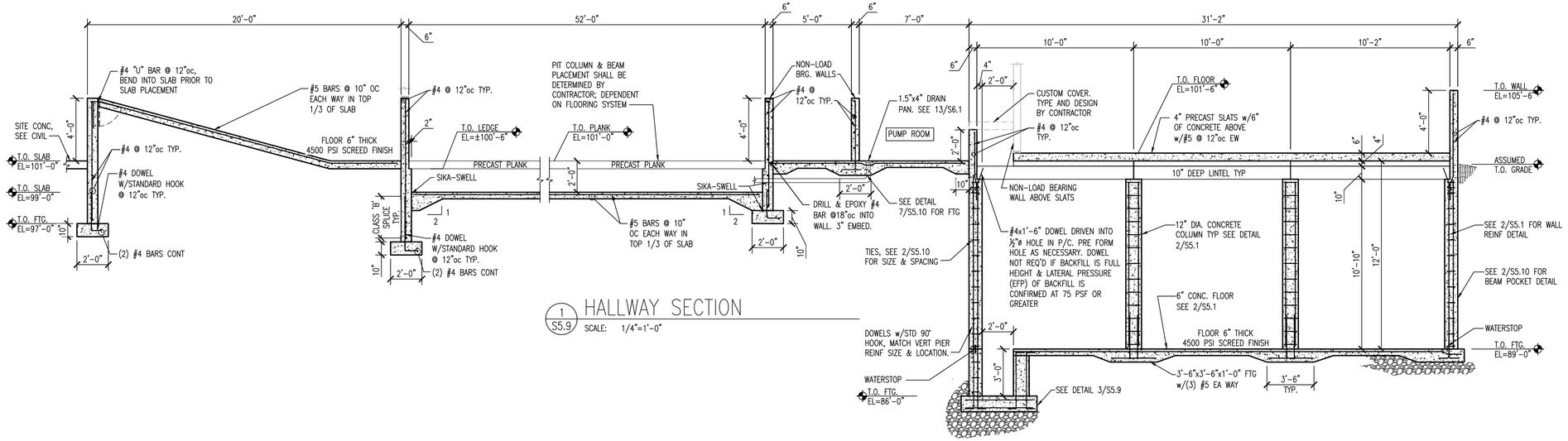

1 S5.9 HALLWAY SECTION

SCALE: 1/4"=1'-0"

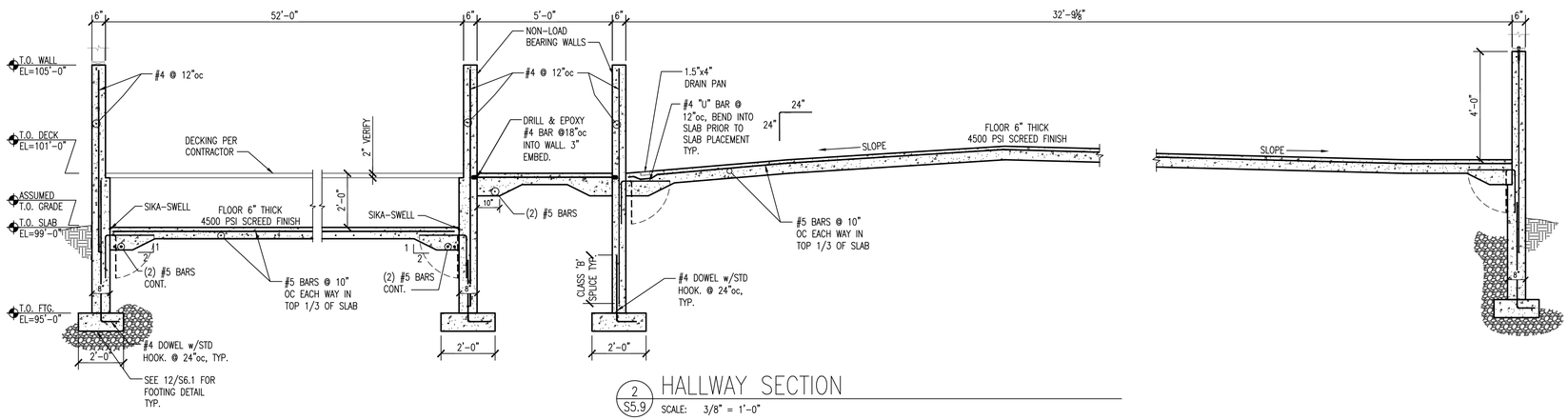

2 S5.9 HALLWAY SECTION

SCALE: 3/8" = 1'-0"

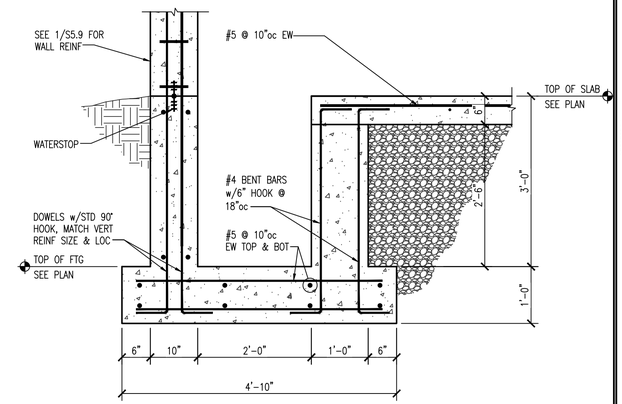

3 S5.9 SUMP PIT DETAIL

SCALE: 3/4"=1'-0"

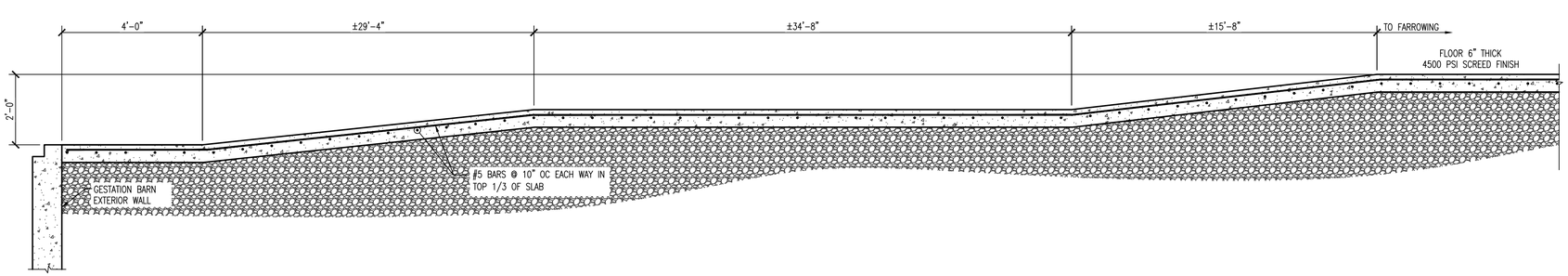

4 S5.9 RAMP DETAIL

SCALE: 1/2" = 1'-0"

ROTH FARROWING FACILITY

HOG FACILITY
WAUZEKA, WI
-

(mp)² STRUCTURAL ENGINEERS, LLC
583 D'Onofrio Drive, Suite 201
Madison, WI 53719
Office: 608-821-0177
Fax: 608-821-0793

THE INFORMATION CONTAINED HEREIN IS OF A PROPRIETARY NATURE AND IS SUBMITTED IN CONFIDENCE FOR USE ON THIS PROJECT OR AT THE REQUEST OF THE CONSTRUCTION CONSULTANT. ALL OTHER USES OR USE ON OTHER PROJECTS WITHOUT WRITTEN CONSENT OF MP2 STRUCTURAL ENGINEERS, LLC, IS FORBIDDEN. ALL RIGHTS RESERVED. THE INFORMATION CONTAINED HEREIN, OR PORTIONS THEREOF, MAY NOT BE DISCLOSED TO OTHERS, NOR MADE AVAILABLE TO THE PUBLIC IN ANY MANNER WITHOUT WRITTEN CONSENT OF MP2 STRUCTURAL ENGINEERS, LLC.
THE INFORMATION CONTAINED HEREIN MAY BE MADE AVAILABLE TO USE OR DISCLOSE TO OTHERS, THE SUBJECT MATTER CONTAINED HEREIN FOR ANY USES NOT INTENDED PURPOSES.

ISSUE

	FOR REVIEW 01.07.2020
	FOR REVIEW 03.16.2020
	FOR REVIEW 04.10.2020
	FOR CONSTRUCTION 04.29.2020

REVISIONS

MP2 JOB #: 1916215WI
CLIENT JOB #:
DRAWN BY: JSA
CHECKED BY: AJ

SHEET CONTENTS

CONNECTOR BUILDING DETAILS

SHEET NUMBER

S5.9

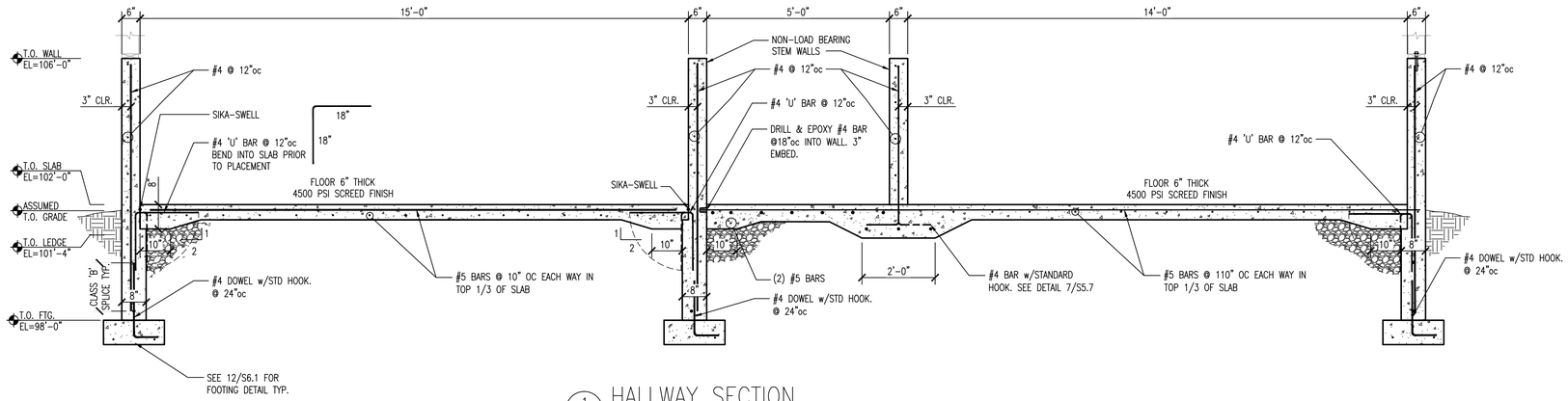

1 S5.10 HALLWAY SECTION
SCALE: 1/2" = 1'-0"

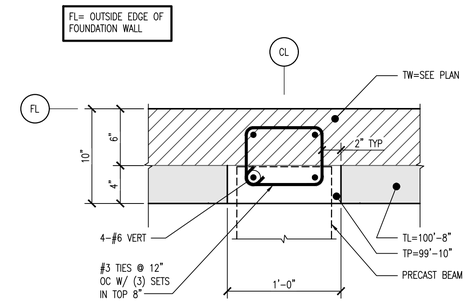

2 S5.10 TYPICAL BEAM POCKET DETAIL
SCALE: 1 1/2"=1'-0"

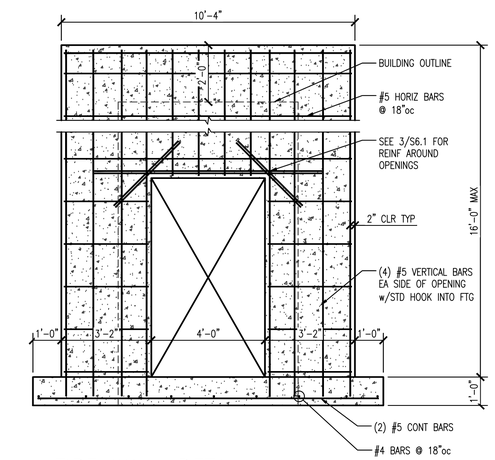

3 S5.10 FIRE WALL DETAIL
SCALE: 3/8"=1'-0"

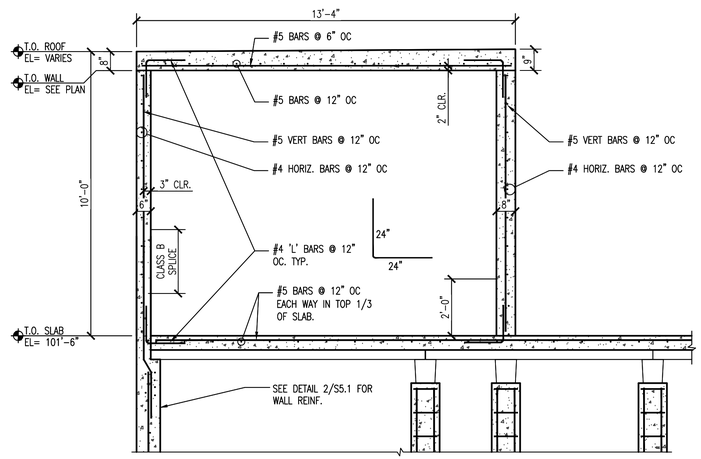

4 S5.10 CONCRETE CROSS SECTION
SCALE: 3/8"=1'-0"

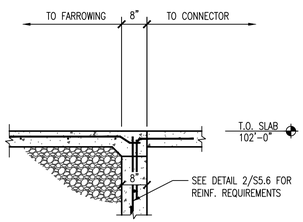

5 S5.10 CONNECTOR BLDG SECTION
SCALE: 1/2"=1'-0"

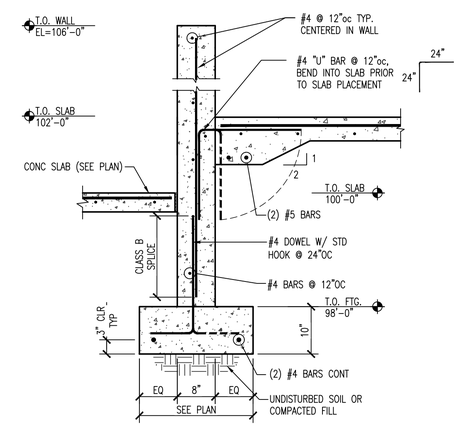

6 S5.10 CONNECTOR BLDG. SECTION
SCALE: 3/4"=1'-0"

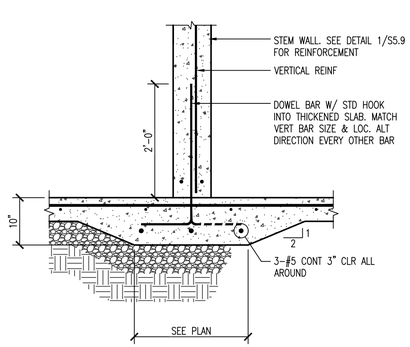

7 S5.10 TYPICAL THICKENED SLAB
SCALE: 3/4"=1'-0"

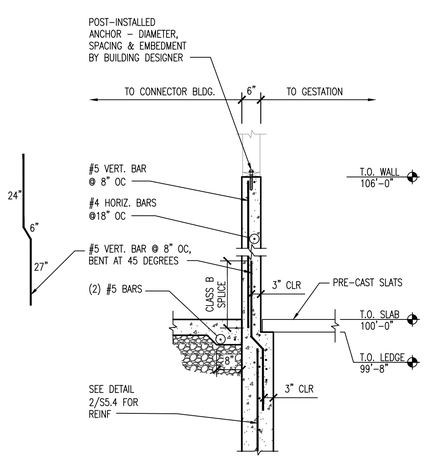

8 S5.10 CONNECTOR BLDG SECTION
SCALE: 1/2"=1'-0"

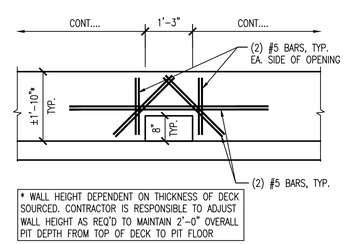

9 S5.10 EQUALIZATION PORT DETAIL
SCALE: 1/2"=1'-0"

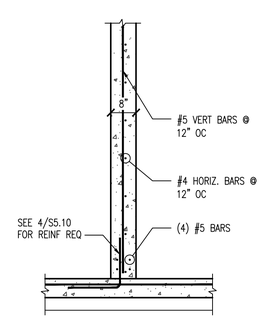

10 S5.10 POWER WASHER WALL DETAIL
SCALE: 1/2"=1'-0"

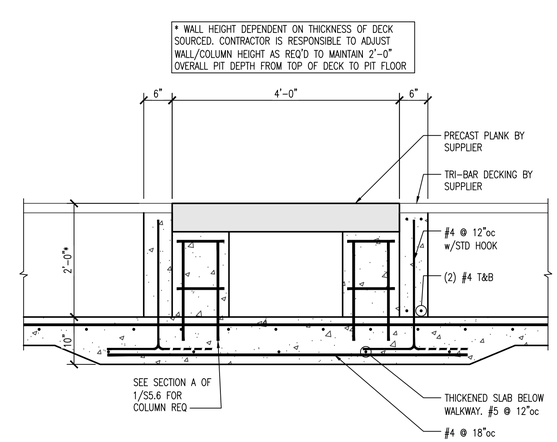

11 S5.10 WALKWAY AT HOLDING PENS
SCALE: 3/4"=1'-0"

ROTH FARROWING FACILITY
HOG FACILITY
WAUZEKA, WI
-

(mp)² STRUCTURAL ENGINEERS, LLC
583 D'Onofrio Drive, Suite 201
Madison, WI 53719
Office: 608-821-0800
Fax: 608-821-0793

THE INFORMATION CONTAINED HEREIN IS OF A PROPRIETARY NATURE AND IS SUBMITTED IN CONFIDENCE FOR USE ONLY BY THE OWNER OF AN INSURED STRUCTURAL CONSULTANT, ALL OTHER USE OR USE BY OTHERS IS PROHIBITED WITHOUT THE WRITTEN CONSENT OF (mp)² STRUCTURAL ENGINEERS, LLC. THIS DOCUMENT AND ALL OTHER DOCUMENTS, DESIGNS, DRAWINGS, SPECIFICATIONS, REPORTS, PROJECTS, PROGRAMS AND PROCEDURES PREPARED OR ADOPTED BY (mp)² STRUCTURAL ENGINEERS, LLC, REMAIN THE PROPERTY OF (mp)² STRUCTURAL ENGINEERS, LLC. WITHOUT WRITTEN CONSENT OF (mp)² STRUCTURAL ENGINEERS, LLC, THE INFORMATION CONTAINED HEREIN MAY NOT BE DISCLOSED OR OTHERWISE MADE AVAILABLE TO OTHERS, NOR MAY THE SUBJECT MATTER CONTAINED HEREIN BE USED FOR ANY OTHER OR ADDITIONAL PURPOSES.

ISSUE

	FOR REVIEW 01.07.2020
	FOR REVIEW 03.16.2020
	FOR REVIEW 04.10.2020
	FOR CONSTRUCTION 04.29.2020

REVISIONS

MP2 JOB #: 1916215WI
CLIENT JOB #:
DRAWN BY: JSA
CHECKED BY: AJ

SHEET CONTENTS
CONNECTOR BUILDING DETAILS

SHEET NUMBER
S5.10

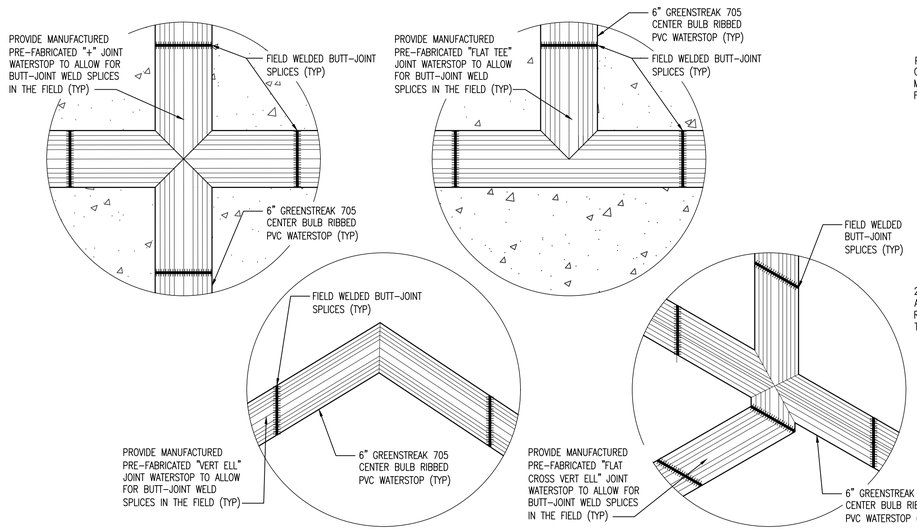

1 S6.1 PREFAB WATERSTOP DETAILS
SCALE: NTS

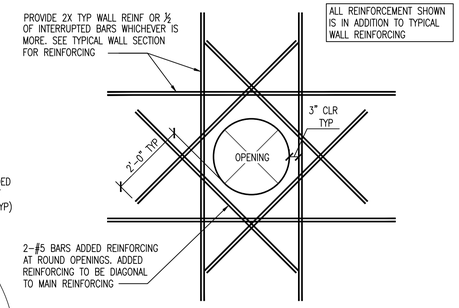

2 S6.1 ADDED REINFORCING AT ROUND OPENINGS
SCALE: 1/2"=1'-0"

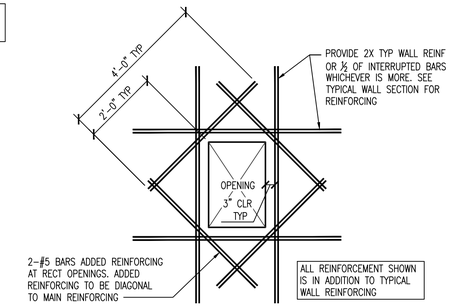

3 S6.1 ADDED REINFORCING AT RECTANGULAR OPENINGS
SCALE: 1/2"=1'-0"

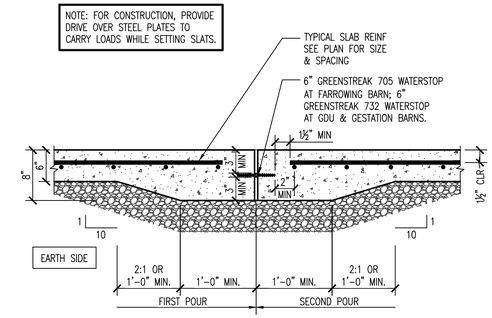

4 S6.1 SLAB CONTROL JOINT
SCALE: NTS

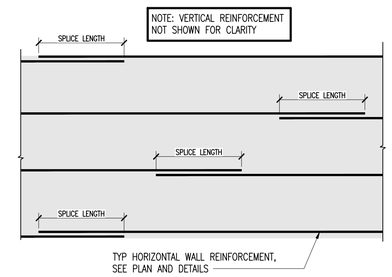

ELEVATION "A"

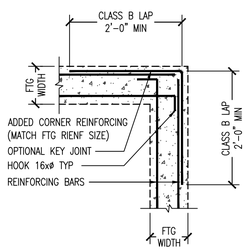

5 S6.1 FOOTING CORNER REINFORCING
SCALE: NTS

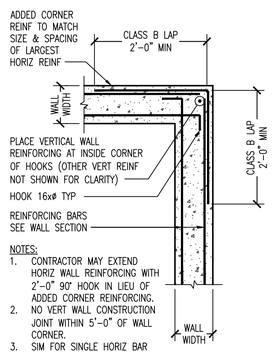

NOTES:
1. CONTRACTOR MAY EXTEND HORIZ WALL REINFORCING WITH 2'-0" 90° HOOK IN LIEU OF ADDED CORNER REINFORCING.
2. NO VERT WALL CONSTRUCTION JOINT WITHIN 5'-0" OF WALL CORNER.
3. SIM FOR SINGLE HORIZ BAR

6 S6.1 WALL CORNER REINFORCING
SCALE: NTS

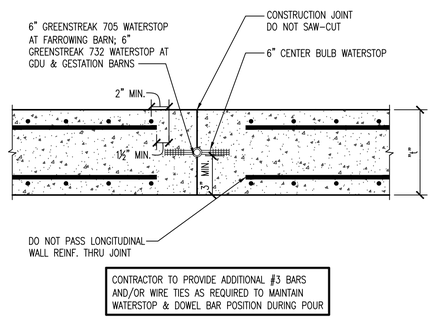

7 S6.1 WALL EXPANSION JOINT (WEJ)
SCALE: NTS

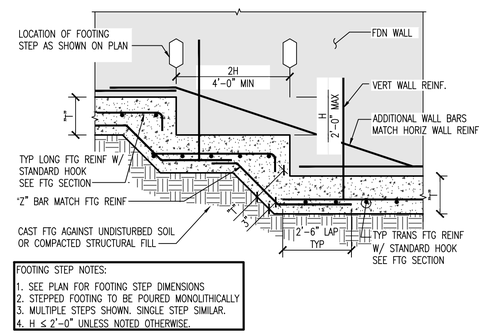

FOOTING STEP NOTES:
1. SEE PLAN FOR FOOTING STEP DIMENSIONS
2. STEPPED FOOTING TO BE POURED MONOLITHICALLY
3. MULTIPLE STEPS SHOWN. SINGLE STEP SIMILAR.
4. H ≤ 2'-0" UNLESS NOTED OTHERWISE.

8 S6.1 FOOTING STEP DETAIL
SCALE: 1/2"=1'-0"

9 S6.1 TYPICAL HORIZONTAL REINFORCEMENT LAP DETAIL
SCALE: NTS

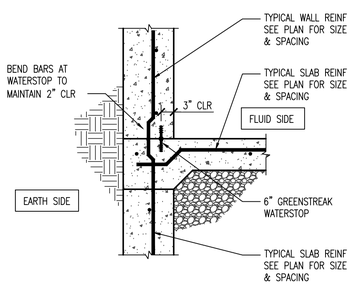

10 S6.1 WALL TO FLOOR JOINT W/ WATERSTOP (FARROWING BARN)
SCALE: NTS

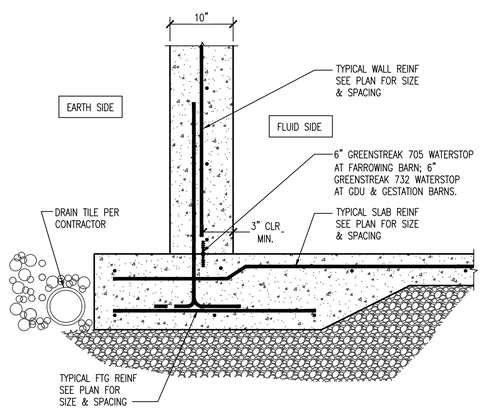

11 S6.1 WALL TO FLOOR JOINT W/ WATERSTOP (GDU/GESTATION BARN)
SCALE: NTS

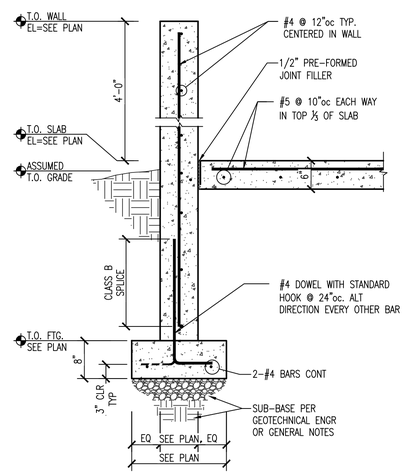

12 S6.1 FDN WALL DETAIL
SCALE: 3/4"=1'-0"

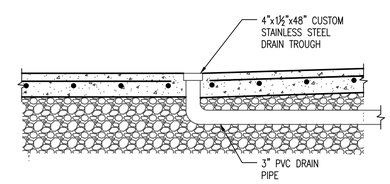

13 S6.1 TYP DRAIN TROUGH DETAIL
SCALE: 3/4"=1'-0"

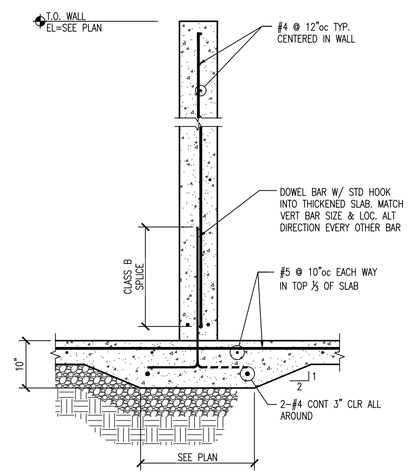

14 S6.1 INTERIOR FDN WALL DETAIL
SCALE: 3/4"=1'-0"

ROTH FARROWING FACILITY
HOG FACILITY
WAUZEKA, WI
-

(mp)² STRUCTURAL ENGINEERS, LLC
583 D'Onofrio Drive, Suite 201
Madison, WI 53719
Office: 608-821-9770
Fax: 608-821-9780

THE INFORMATION CONTAINED HEREIN IS OF A PROPRIETARY NATURE AND IS SUBMITTED IN CONFIDENCE FOR USE ONLY BY THE CLIENT OR AN AUTHORIZED REPRESENTATIVE OF THE CLIENT. OWNERSHIP AND ALL RIGHTS TO THE CLIENT AND ITS REPRESENTATIVES ARE RECOGNIZED. ALL DATA OR IDEAS REFLECTED HEREIN, INCLUDING DESIGN, PROCESS, PROCEDURE, PROGRAM OR PRODUCTS, MUST BE KEPT CONFIDENTIAL. NO PART OF THIS DOCUMENT MAY BE REPRODUCED OR TRANSMITTED WITHOUT WRITTEN CONSENT OF (mp)² STRUCTURAL ENGINEERS, LLC. THE CLIENT AND ITS REPRESENTATIVES HAVE THE RIGHT TO USE THE DOCUMENT TO USE OR DISCLOSE TO OTHERS THE SUBJECT MATTER CONTAINED HEREIN FOR ANY USES BUT FOR AUTHORIZED PURPOSES.

ISSUE

	FOR REVIEW 01.07.2020
	FOR REVIEW 03.16.2020
	FOR REVIEW 04.10.2020
	FOR CONSTRUCTION 04.29.2020

REVISIONS

MP2 JOB #: 1916215WI
CLIENT JOB #:
DRAWN BY: JSA
CHECKED BY: AJ

SHEET CONTENTS
FOUNDATION DETAILS

SHEET NUMBER
S6.1